WELDING INDUSTRIES OF AUSTRALIA
A DIVISION OF WELDING INDUSTRIES LTD
ACN 004 547 111

Head Office and International Sales

5 Allan Street, Melrose Park

South Australia, 5039

Telephone (08) 8276 6494 Facsimile (08) 8276 6327

OWNERS MANUAL

TIGARC 150DC

MODEL NO. MC86-2, REV. C

220V/240V VERSION

10/95

QUALITY WELDING PRODUCTS, SYSTEMS AND SERVICE

The information contained in this manual is set out to enable you to properly maintain your new equipment and ensure that you obtain maximum operating efficiency.

Please ensure that this information is kept in a safe place for ready reference when required at any future time.

When requesting spare parts, please quote the serial number of the machine and if possible, the part number of the item required. All relevant numbers are shown in this manual. Failure to supply this information may result in unnecessary delays in supplying the correct parts.

SAFETY

Before this equipment is put into operation, the SAFE PRACTICES section at the back of the manual must be read completely. This will help to avoid possible injury due to misuse or improper welding applications.

PLASTIC HANDLE

Please note that the handle fitted to the TIGARC 140DC is intended for carrying the machine by hand only.

DO NOT use this handle for suspending or mounting the machine in any other manner.

CONTENTS

SECTION		PAGE
1	Receiving	3
2	Specifications	4
3	Connection To Mains	5
4	Operation	5
5	Maintenance	8
6	Fault Finding	8
7	Service Information	9
8	Parts Lists	10
9	Safe Practices	13

FIGURE		PAGE
1	GTAW Welding	5
2	Connections For GTAW	6
3	Connections For MMAW	7
4	MMAW Welding	8
5	Circuit Diagram	9
6	Power Source Assembly	11
6	GTAW Torch And Accessories	12

1. RECEIVING

Check the equipment received against the shipping invoice to make sure the shipment is complete and undamaged. If any damage has occurred in transit, please immediately notify your supplier.

The TIGARC 150DC carton contains:

- TIGARC 150DC Welding Power Supply
- Sample pack of AUSTARC 12P and 13S electrodes
- (This) Owners Manual

The genuine WIA AA32 Acccessory Kit contains:

- Work lead with spring 'Work' clamp
- Electrode lead with electrode holder
- Face shield

The genuine WIA AA47-0 Accessory Kit contains:

- 150 Amp GTAW torch
- Torch terminal adaptor
- Tungsten electrode, 2% thoriated
- Gas regulator and flowguage
- Gas hose assembly, 2 metre
- Heavy duty Work lead with spring 'Work' clamp.

2. SPECIFICATIONS

INPUT VOLTAGE .....220/240 Volts AC 50/60 Hz

RATED INPUT CURRENT .....14 Amps@220V, 12.5 Amps@240V

MAXIMUM SHORT CIRCUIT CURRENT.....38 Amps@220V. 34 Amps@240V

MAXIMUM KVA REQUIREMENT .....8.2 kva

SUPPLY FLEXIBLE CABLE RATING .....15 Amps

OPEN CIRCUIT VOLTAGE.....44 Volts Max.

RATED OUTPUT CURRENT

GTAW.....105 A, 14 VDC, 25% Duty
52.5 A, 12 VDC, 100% Duty

MMAW.....100 A, 24 VDC, 25% Duty
50 A, 22 VDC, 100% Duty

WELDING CURRENT RANGE.....5 to 120 Amps

ELECTRODE RANGE.....2.0 to 3.2mm diameter

MASS .....27 Kg

DIMENSIONS .....H 365mm(incl. handle),
W 240mm, D 370mm

Duty Cycle is defined in Australian Standard AS1966.1 as the ratio of arcing time to 5 minutes in any 5 minute period, expressed as a percentage.

3. CONNECTION TO ELECTRICAL MAINS POWER SUPPLY

Before removing the machine cover, ENSURE that the unit is disconnected from the mains power supply. When the unit is energised LETHAL VOLTAGES are present on the electrical and electronic components enclosed.

The WELDARC 140 can be set for a supply voltage of either 220 or 240 volts AC. To adjust the supply voltage tapping, remove the machine cover, and terminate the white wire in the appropriately marked connection point. The machine is factory set for 240 volts.

The recommended Supply Fuse rating is 15 Amps. Due to peak current requirements, the mains supply to welding machines is best protected by a fuse. A Circuit Breaker may trip frequently if used in this application.

The machine is supplied with a 3 metre, 15 Amp Heavy Duty (30/0.25) PVC mains power supply cable. If it becomes necessary to replace the mains power supply cable, use only a cable with equivalent current rating.

4. OPERATION

Be certain that you are wearing suitable protective clothing, gloves etc, and that you are working in a non-hazardous area. If necessary, refer again to the SAFE PRACTICES section of this manual.

GAS TUNGSTEN ARC WELDING

GTAW is a very clean welding method in which the welding arc is established between a non-melting tungsten electrode and the workpiece. The welding zone, molten weld metal and tungsten electrode are protected from contamination by a shield of inert gas, usually Argon. The process can be used to fusion weld, ie. melt the edges of the workpiece together without metal being added to the weld, or filler metal may be fed into the arc by hand.

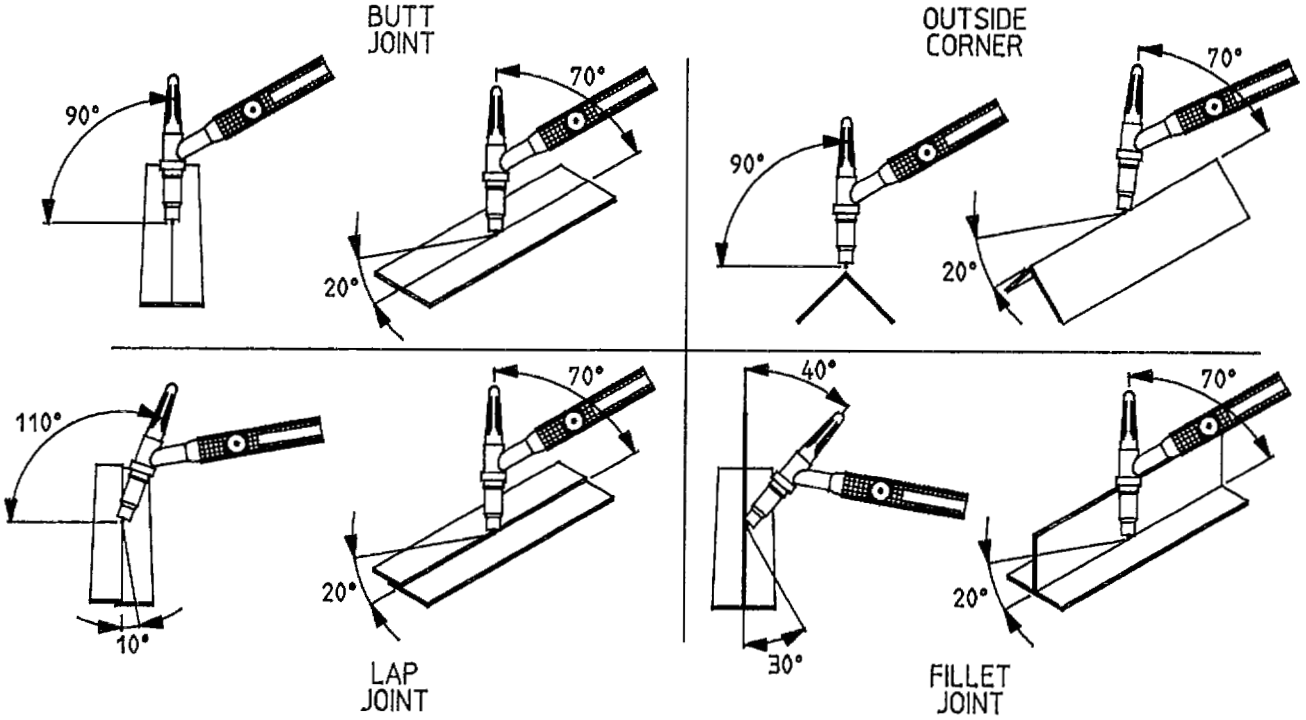

FIGURE 1. GAS TUNGSTEN ARC WELDING.

The TIGARC 150DC is a Direct Current machine, and for GTAW the torch is connected to the GTAW (-) output terminal. Figure 2 illustrates the correct connection of the welding torch and gas supply.

Tungsten electrodes for DC GTAW should be 1 - 2% Thoriated. This type will provide the best arc initiation, arc stability and tip shape retention characteristics. Thoriated electrodes can be recognised by a red coded end. The tungsten electrode is ground to a point, with the grinding marks pointing towards the tip. For welding currents less than 20 amps, the included angle of the point should be 30°, for currents greater than 20 amps, the recommended angle is 60°. When set in the torch, the tungsten should protrude 12mm from the ceramic gas nozzle.

Before initial use of the welding torch, allow gas to purge the torch and hoses for 5 minutes at approximately 10 litres/min. For welding purposes, the gas flow rate should be set in the range 2-5 litres/min.

To initiate the arc, the tungsten electrode should be touched preferably onto a piece of copper adjacent to the workpiece, then lifted in a smooth movement to establish an arc length slightly larger than the diameter of the electrode. When the arc is stable, it can be transferred to the workpiece.

Use of a copper striking plate is recommended to avoid electrode contamination. The electrode can also be contaminated by contact with the filler rod. A contaminated electrode produces an unstable arc.

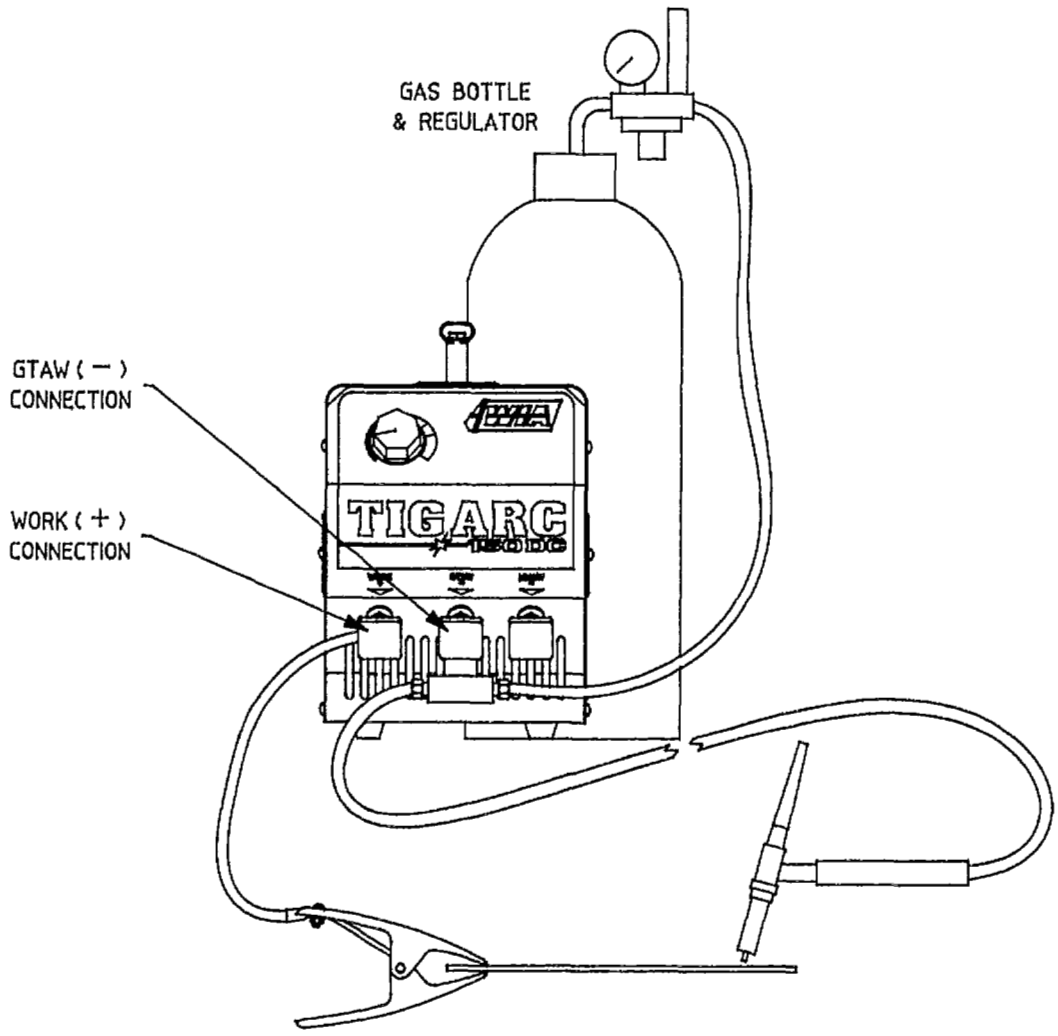

FIGURE 2. CONNECTIONS FOR GTAW.

MANUAL METAL ARC WELDING.

MMAW is a welding process where an arc is struck between a flux-coated consumable electrode and the workpiece. The arc and the weld pool are both shielded by gases generated from the coating of the electrode. The TIGARC 150DC may be used with 2.0mm, 2.5mm, and 3.2mm diameter welding electrodes. The smaller sizes are used when welding at lower currents, such as sheet-metal applications. Increasing the electrode diameter permits higher welding currents to be selected.

When using a DC (Direct Current) welding machine such as the TIGARC 150DC, it is important to select the electrode polarity in accordance with the manufacturers' recommendations for that electrode. Both methods of connection are shown in Figure 3 below.

W.I.A. manufactures a wide range of mild steel and special purpose electrodes which cater for home workshop, rural, and industrial requirements. Some popular AUSTARC electrodes are listed below. The correctly selected AUSTARC electrode used in conjunction with the TIGARC 150DC will provide a stable arc and high quality weld deposit.

Austarc 12P, Classification AS1553, E4112.
A popular general purpose electrode used with ease in all positions, vertical up or down. The smooth forceful arc makes it an ideal electrode for all general mild steel applications. Preferred polarity electrode positive.

Austarc 13S, Classification AS1553, E4113.
A smooth running electrode with a soft arc, particularly suited to light sheetmetal and smooth mitre fillet welds. Preferred polarity electrode positive.

Austarc 16TC, Classification AS1553, E4816.
A low hydrogen electrode with good arc stability and out-of-position welding characteristics. This electrode is ideal for medium carbon steels, or steels of unknown analysis. Operate electrode positive.

Unicord 312, Classification AS2576, 1330-A3
A high tensile (770 MPa), high chromium nickel electrode specially formulated for joining all alloy steels and irons, and for tool and die maintenance. Operate electrode positive.

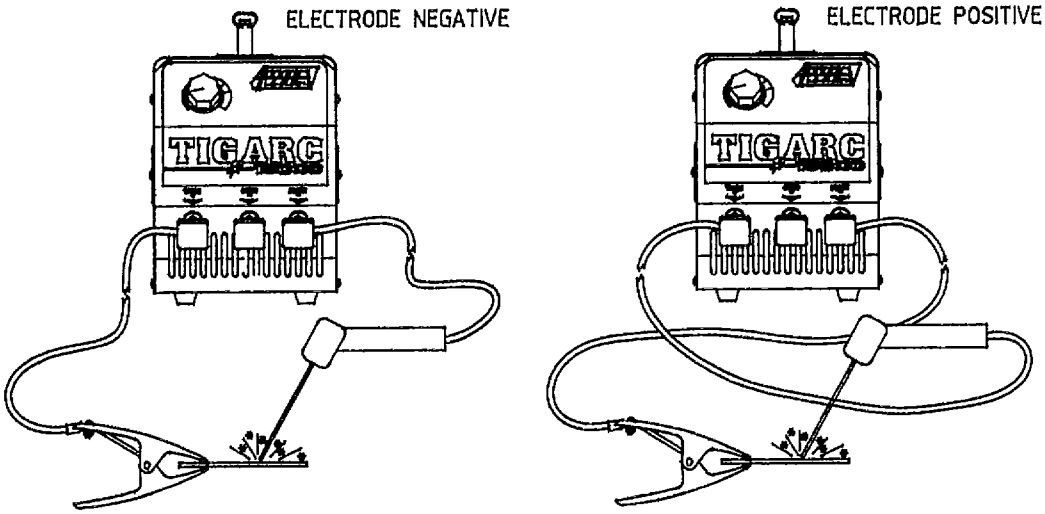

FIGURE 3.CONNECTIONS FOR MMAW.

To strike the arc, drag the end of the electrode along the workpiece as if striking a match. As the arc initiates, lift the electrode slightly away, aiming to establish an arc length of approximately 3mm. As the electrode end is consumed, feed the electrode into the arc in order to maintain a constant arc length. As a general rule, the arc should be held as short as possible while still giving stable burn off and good weld appearance. An arc which is too long causes an unwieldly flow of metal with a rough weld appearance and reduced penetration. An arc too short leads to a narrow weld deposit and "stuttery" arc characteristic, and the electrode is liable to freeze onto the workpiece.

As the solidified weld deposit forms, move the end of the electrode slowly along the weld path, aiming to maintain a pool of molten weld metal behind the arc. Decreasing this rate of travel will result in a wider weld deposit, and similarly increasing it will narrow the weld deposit. Always fill the crater which tends to form at the end of a weld deposit, by pausing momentarily before withdrawing the electrode to break the arc. Unfilled craters are a point of weakness, and can lead to weld cracking.

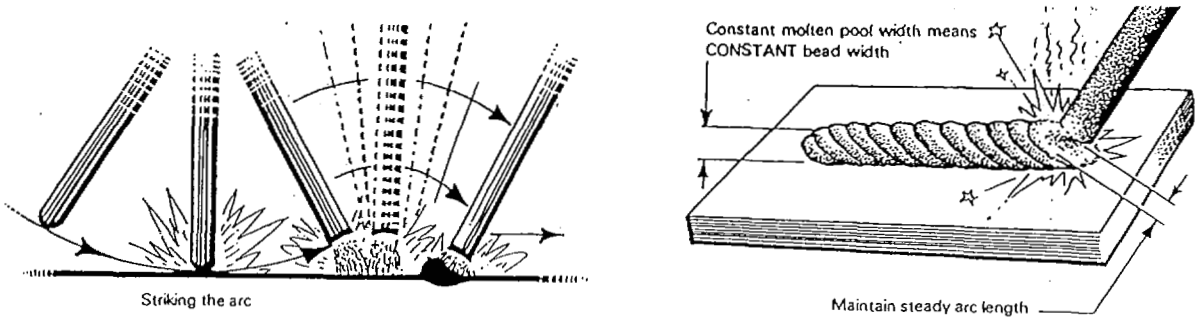

FIGURE 4. MANUAL METAL ARC WELDING.

5. MAINTENANCE

Before removing the machine cover, ENSURE that the unit is disconnected from the mains power supply. When the unit is energised LETHAL VOLTAGES are present on the electrical and electronic components enclosed.

Care should be taken to prevent excessive build-up of dust and dirt within the welding power source. It is recommended that at regular intervals, according to the prevailing conditions, the machine covers be removed and any accumulated dust be removed by the use of dry, low pressure compressed air, or a vacuum cleaner.

6. FAULT FINDING, NO WELDING CURRENT

Check that Mains Supply is available at the TIGARC 150DC Power Source, i.e. that the fan is running. Check for continuity of the welding current circuit, i.e., work lead, work clamp and electrode holder.

The TIGARC 150DC welding power source incorporates an inbuilt protection device which will trip if the unit is overloaded. In this event the machine will not deliver welding current until the overload device has been MANUALLY reset. The overload device cannot be reset immediately after it has tripped. Before resetting, establish and correct the cause of the overload condition. The reset button is located on the rear panel, just above the Supply Flexible Cable entry.

If equipment failure is suspected, forward the unit to your nearest WIA Sales and Service Branch, or qualified service agent.

7. SERVICE INFORMATION.

NOTE that the following information is intended for use by Qualified Service Personnel. When the unit is energised LETHAL VOLTAGES are present on the electrical and electronic components. It is not intended that persons without suitable training and knowledge attempt to perform service tasks on the components of this Welder.

The electrical components of the TIGARC 150DC are shown in the circuit diagram below. The output of the welding transformer is full-wave bridge rectified, with the GTAW output current smoothed by a DC inductance coil.

Primary voltage to the Welding Transformer is controlled by means of a Triac based phase shift circuit. Adjustment of the front panel potentiometer will vary the open circuit output voltage of the Welding Transformer.

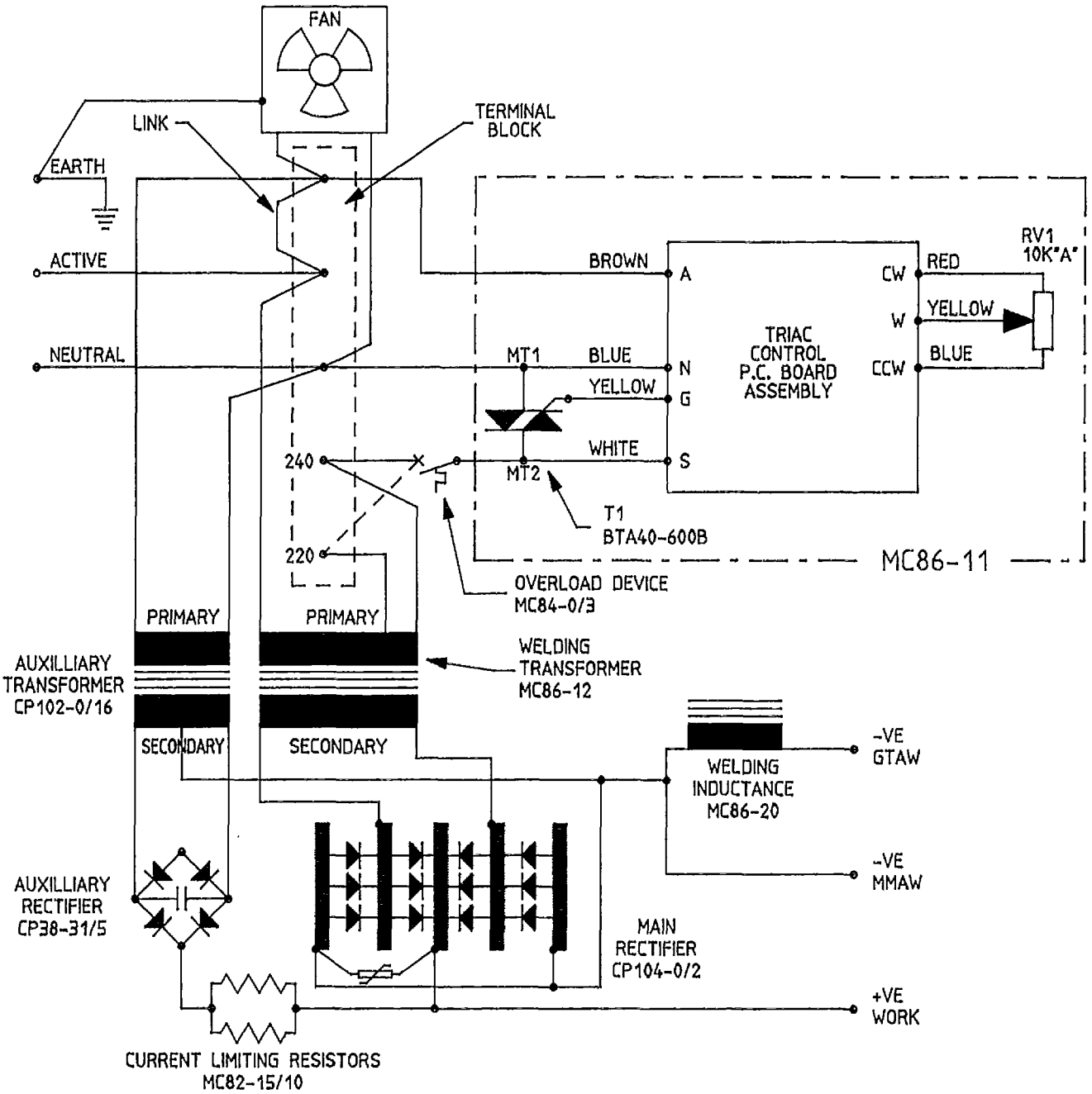

FIGURE 5. TIGARC 150DC CIRCUIT DIAGRAM

The TIGARC 150DC also includes an auxilliary transformer, rectifier, and current limiting resistors. The current from these components maintains the GTAW arc during periods when the triac is not conducting. The printed circuit board assembly provides the appropriate trigger pulses to the Triac. As this circuit incorporates specialized components, it is not intended to be repaired in the field. Replacement assemblies obtained from WIA are supplied complete with Triac and Potentiometer.

Replacing the Triac requires removal of the original part by first drilling out the retaining pop-rivets. Clean the mounting surface to remove swarf and any remaining heat-sink compound. Always apply clean heat-sink compound to the new triac prior to assembly.

To correctly adjust the phase-shift range of a replacement circuit board:

- Rotate the Current Control potentiometer knob to the minimum current position, (fully anti-clockwise).
- Disconnect the red wire from the positive terminal of the auxilliary rectifier (CP38-31/5).
- Connect a DC Voltmeter to the welding output terminals "+ve WORK" and "-ve MMAW".
- With the TIGARC energised, but not welding, adjust the potentiometer RV2 on the printed circuit board to obtain a voltmeter reading of 12 volts.
- Reconnect the red wire to the positive terminal of the auxilliary rectifier.

8. PARTS LISTS

TIGARC 150DC POWER SOURCE

ITEM #	PART#	DESCRIPTION
1	MC86-11	Printed Circuit Assembly
Includes		
	CP101-11/8	Potentiometer
	CP101-11/2	Triac
2	MC86-23	Transformer Assembly (220/240V)
3	MC86-13	Base
4	MC84-14	Cover
5	SA140-0/1	Handle
6	MC84-16	Terminal Assembly
Includes		
	MC11-41/1	Terminal Knob
7	MC66-0/8	Primary Flex and Plug
8	CP27-0/15	Fan and Motor
9	CP101-0/17	Fan Finger Guard
10	W11-0/16	Potentiometer Knob
11	MK6/4	Terminal Block
12	H390W	Cup Terminal and Washer
13	H285	Earth Tab
15	CP102-0/18	Circuit Board Support
17	WIN199	Label Set
18	HF200-1/15	Foot
19	MC84-0/3	Overload Device
20	MC84-0/2	Cable Gland
21	MC84-0/4	Cable Gland Nut
22	MC86-20	Inductance Assembly
23	CP104-0/2	Rectifier Assembly
24	CP102-0/16	Auxilliary Transformer
25	CP38-31/5	Diode Bridge
26	MC82-15/10	Resistor
31	MC84-24	Heatsink to suit 220/240V

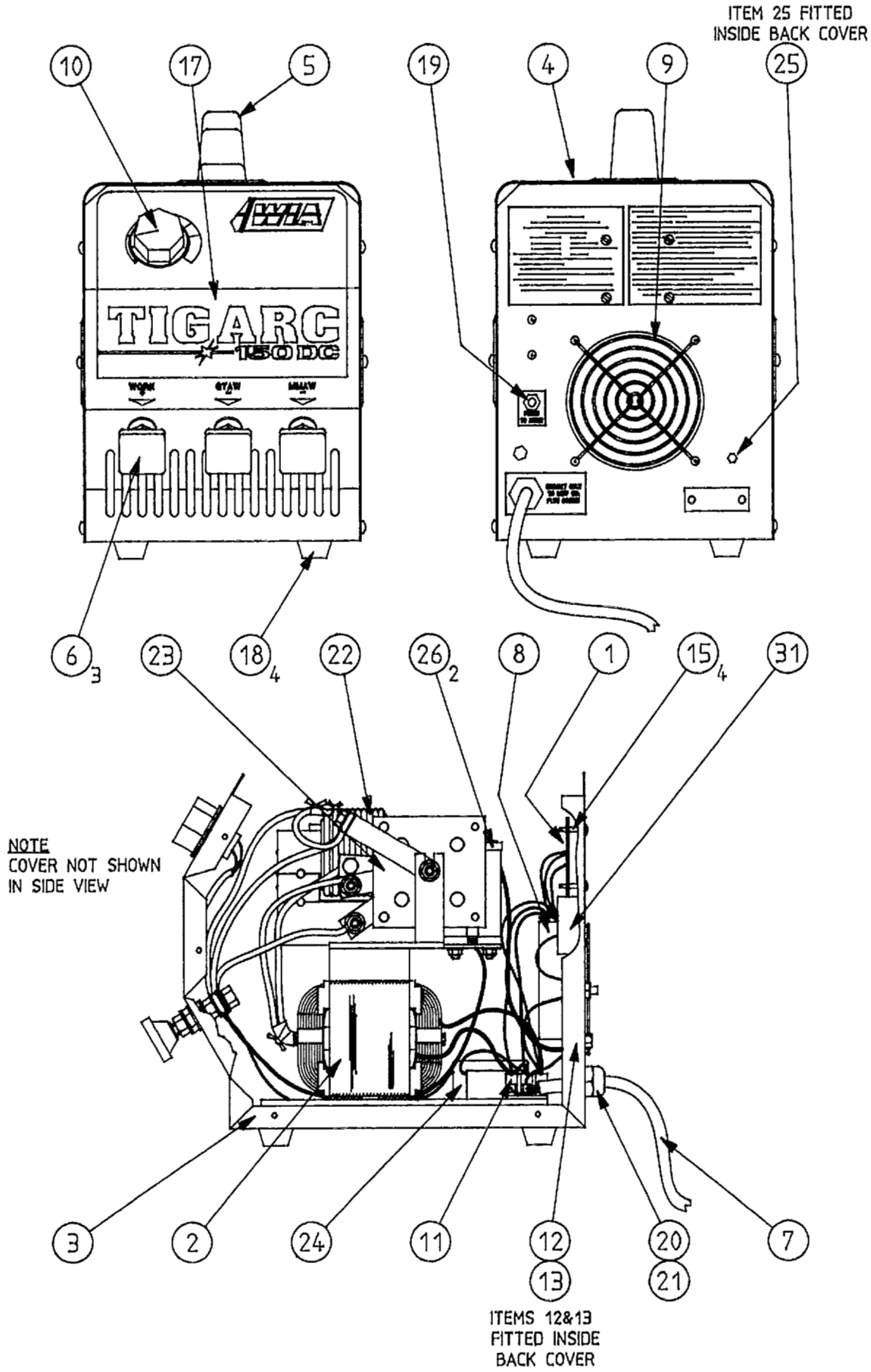

FIGURE 6. TIGARC 150DC POWER SOURCE ASSEMBLY

GTAW TORCH AND ACCESSORIES

ITEM #	PART #	DESCRIPTION
1	CK1512VR	GTAW Torch, Rigid
Includes		
1.1	300M	Medium backcap
1.2	300HS	Heatshield
1.3	3C332	Collet
1.4	3CB332	Collet body
1.5	3A7	Alumina Nozzle
1.6	100VK	Gas Valve
2	TUNGTH2.4	2.4mm diam. 2% Thoriated Tungsten
3	CK15PCA	Torch Terminal Adaptor
4	AA47-0/1	Gas Hose Assembly
5	HA101-185	Gas Regulator and flowgauge

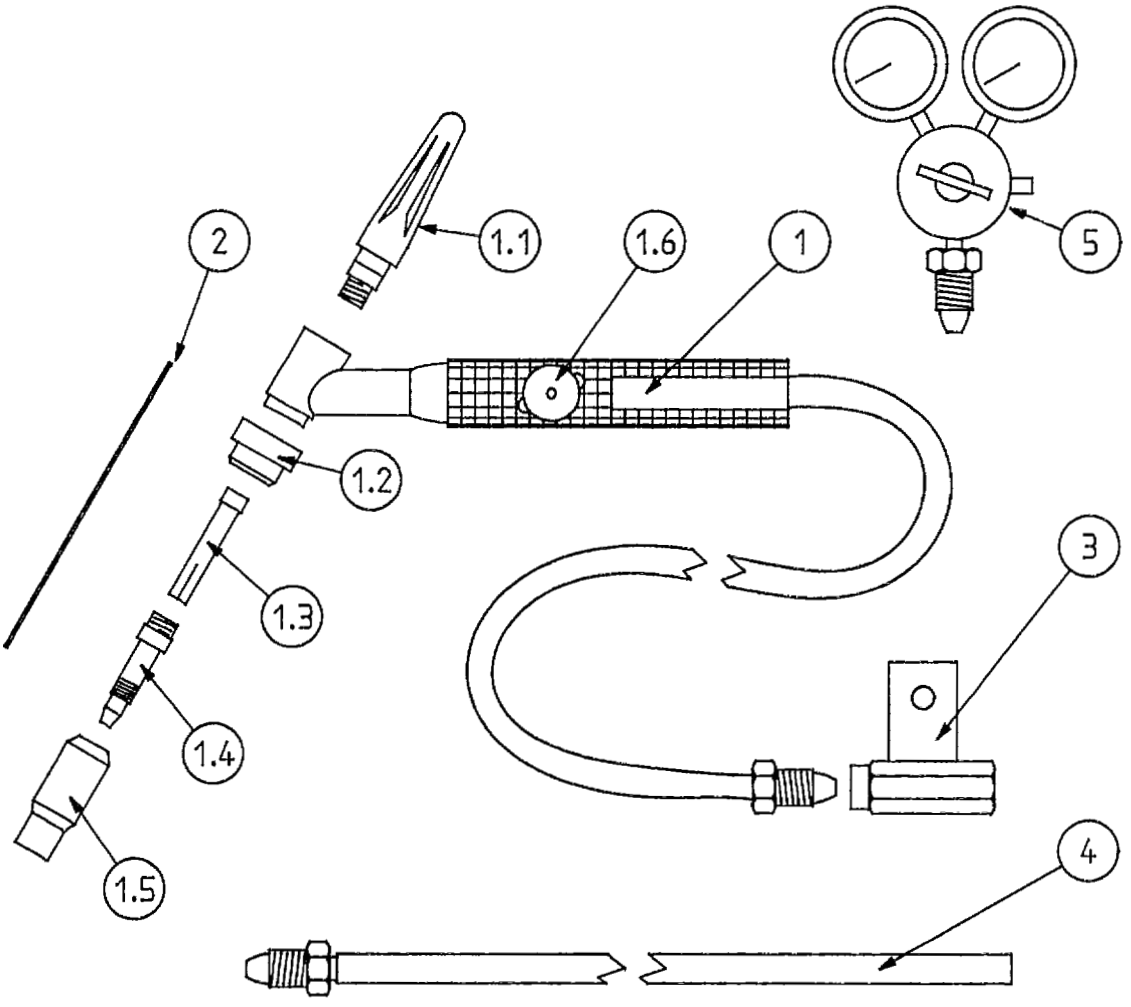

FIGURE 7. GTAW TORCH AND ACCESSORIES

9. SAFE PRACTICES WHEN USING WELDING EQUIPMENT

These notes are provided in the interests of improving operator safety. They should be considered only as a basic guide to Safe Working Habits. A full list of Standards pertaining to industry is available from the Standards Association of Australia, also various State Electricity Authorities, Departments of Labour and Industry or Mines Department and other Local Health or Safety Inspection Authorities may have additional requirements. WTIA Technical Note TN7-98 also provides a comprehensive guide to safe practices in welding.

EYE PROTECTION

NEVER LOOK AT AN ARC WITHOUT PROTECTION. Wear a helmet with safety goggles or glasses with side shields underneath, with appropriate filter lenses protected by clear cover lens. This is a MUST for welding, cutting, and chipping to protect the eyes from radiant energy and flying metal. Replace the cover lens when broken, pitted, or spattered.

Recommended shade filter lens.

Amps	TIG	MMAW	MIG	Pulsed MIG
0-100	10	9	10	12-13
100-150	11	10	10	12-13
150-200	12	10-11	11-12	12-13
200-300	13	11	12-13	12-13
300-400	14	12	13	14
400-500	--	13	14	14
500 +	--	--	14	14

BURN PROTECTION.

The welding arc is intense and visibly bright. Its radiation can damage eyes, penetrate lightweight clothing, reflect from light-coloured surfaces, and burn the skin and eyes. Burns resulting from gas-shielded arcs resemble acute sunburn, but can be more severe and painful.

Wear protective clothing - leather or heat resistant gloves, hat, and safety-toe boots. Button shirt collar and pocket flaps, and wear cuffless trousers to avoid entry of sparks and slag.

Avoid oily or greasy clothing. A spark may ignite them. Hot metal such as electrode stubs and work pieces should never be handled without gloves.

Ear plugs should be worn when welding in overhead positions or in a confined space. A hard hat should be worn when others are working overhead.

Flammable hair preparations should not be used by persons intending to weld or cut.

TOXIC FUMES.

Adequate ventilation with air is essential. Severe discomfort, illness or death can result from fumes, vapours, heat, or oxygen depletion that welding or cutting may produce. NEVER ventilate with oxygen.

Lead, cadmium, zinc, mercury, and beryllium bearing and similar materials when welded or cut may produce harmful concentrations of toxic fumes. Adequate local exhaust ventilation must be used, or each person in the area as well as the operator must wear an air-supplied respirator. For beryllium, both must be used.

Metals coated with or containing materials that emit fumes should not be heated unless coating is removed from the work surface, the area is well ventilated, or the operator wears an air-supplied respirator.

Work in a confined space only while it is being ventilated and, if necessary, while wearing air-supplied respirator.

Work in a confined space only while it is being ventilated and, if necessary, while wearing air-supplied respirator.

Vapours from chlorinated solvents can be decomposed by the heat of the arc (or flame) to form PHOSGENE, a highly toxic gas, and lung and eye irritating products. The ultra-violet (radiant) energy of the arc can also decompose trichlorethylene and perchlorethylene vapors to form phosgene. Do not weld or cut where solvent vapors can be drawn into the welding or cutting atmosphere or where the radiant energy can penetrate to atmospheres containing even minute amounts of trichlorethylene or percholorethylene.

FIRE AND EXPLOSION PREVENTION.

Be aware that flying sparks or falling slag can pass through cracks, along pipes, through windows or doors, and through wall or floor openings, out of sight of the operator. Sparks and slag can travel up to 10 metres from the arc.

Keep equipment clean and operable, free of oil, grease, and (in electrical parts) of metallic particles that can cause short circuits.

If combustibles are present in the work area, do NOT weld or cut. Move the work if practicable, to an area free of combustibles. Avoid paint spray rooms, dip tanks, storage areas, ventilators. If the work can not be moved, move combustibles at least 10 metres away out of reach of sparks and heat; or protect against ignition with suitable and snug-fitting fire-resistant covers or shields.

Walls touching combustibles on opposite sides should not be welded on or cut. Walls, ceilings, and floor near work should be protected by heat-resistant covers or shields.

A person acting as Fire Watcher must be standing by with suitable fire extinguishing equipment during and for some time after welding or cutting if;

- Combustibles (including building construction) are within 10 metres.
- Combustibles are further than 10 metres but can be ignited by sparks.
- Openings (concealed or visible) in floors or walls within 10 metres may expose combustibles to sparks.
- Combustibles adjacent to walls, ceilings, roofs, or metal partitions can be ignited by radiant or conducted heat.

After work is done, check that area is free of sparks, glowing embers, and flames.

An tank or drum which has contained combustibles can produce flammable vapors when heated. Such a container must never be welded on or cut, unless it has first been cleaned as described in AS.1674-1974, the S.A.A. Cutting and Welding Safety Code. This includes a thorough steam or caustic cleaning (or a solvent or water washing, depending on the combustible's solubility), followed by purging and inerting with nitrogen or carbon dioxide, and using protective equipment as recommended in AS.1674-1974. Water-filling just below working level may substitute for inerting.

Hollow castings or containers must be vented before welding or cutting. They can explode. Never weld or cut where the air may contain flammable dust, gas, or liquid vapours.

SHOCK PREVENTION.

Exposed conductors or other bare metal in the welding circuit, or ungrounded electrically alive equipment can fatally shock a person whose body becomes a conductor. Ensure that the machine is correctly connected and earthed. If unsure have machine installed by a qualified electrician. On mobile or portable equipment, regularly inspect condition of trailing power leads and connecting plugs. Repair or replace damaged leads.

Fully insulated electrode holders should be used. Do not use holders with protruding screws. Fully insulated lock-type connectors should be used to join welding cable lengths.

Terminals and other exposed parts of electrical units should have insulated knobs or covers secured before operation.