GUIL®

USER MANUAL

TORO RANGE A

MATERIAL LIFTERS

TORO A-102/C
TORO A-101/C

ENGLISH

GUIL - ENGINEERING FOR LIFTING LOADS

INDEX

INTRODUCTION 18
OWNER AND USER'S OBLIGATIONS....18
SAFETY RECOMMENDATIONS 18
SET-UP AND WORKING AREA SAFETY....19
LIFTER USE SAFETY INSTRUCTIONS....19
PRE-OPERATION INSPECTION....20
OPERATING INSTRUCTIONS....21
SET-UP....21
REVERSING THE FORKS 23
FUNCTION TEST 24
MOVING THE LIFTER TO THE WORK AREA 24
RAISING THE LOAD....24
LOWERING THE LOAD 25
BLOCKING THE LOAD/SAFETY SYSTEMS 25
AFTER EACH USE....25
TRANSPORT 27
MAINTENANCE 27
RISK ASSESMENT 28
GUARANTEE....31

WARNING!

Failure to comply with the safety or operating instructions in this manual may result in damage to the tower, the lifted load, personal injury or even death! The instructions laid out in this manual must be followed at all times.

INTRODUCTION

Thank you for having chosen a GUIL® material lifter. Your **TORO** machine has been examined and checked before leaving our premises to ensure it is in absolutely perfect condition. To maintain this condition and to ensure a safe use, it is absolutely necessary for the user to read, understand and obey the safety and operating instructions in this manual as it contains information that will give you a thorough knowledge of the workings of your **TORO** lifter and guarantee maximum safety whilst operating it.

TORO lifters are manufactured using high quality components to guarantee maximum durability and safety during its use.

Damages caused by the disregard of this user manual are not subject to warranty; neither the dealer nor the manufacturer accepts liability for any resulting damages to property or personal injury.

Before putting the lifter into service please make sure that there is no damage caused during transportation. Should there be any, consult your distributor or the manufacturer (GUIL®) and do not use the **TORO** lifter until it is in prefect working condition.

The information contained in this manual is subject to change without previous notification and presents no obligations or liability for GUIL®. Under no circumstances will GUIL® be responsible for technical or editorial errors made here, nor for accidental or intentional, direct or indirect damages caused by following this manual or by incomplete information in this manual. GUIL® will not be held responsible for any errors found in this manual.

The information in this document is not intended to cover all possible eventualities. The user must use caution and common sense at all times whilst using the **TORO** lifter. If any doubt or problem should arise do not hesitate to contact the manufacturer GUIL®.

OWNER AND USER'S OBLIGATIONS

Everyone involved with the installation, operation and maintenance of this lifting tower must:

- Be sufficiently qualified, trained or experienced.
- Read and understand both the winch and the lifter manual and follow the instructions given to use them correctly.
- Keep this manual and the winch manual for the entire service life of the product.
- Pass both manuals on to every future owner or user of the tower. This manual should be regarded as a permanent part of your lift and should remain with the lifting tower at all times.
- If either of the manuals are misplaced please contact your dealer or the manufacturer (GUIL®).

SAFETY RECOMMENDATIONS

Prior to set-up, be aware of and avoid the following hazardous situations:

• Drop-offs or holes which impede the lifter being levelled using only the levelling jacks.

• Pot holes, obstacles on the floor or debris.

• Slopes that exceed the adjustment capabilities of the lifter.

• Unstable or slippery surfaces.

• Hazardous locations. Aerial obstacles or overhead electric cables.

• Inadequate surface support to withstand all load forces imposed by the lifter.

• Weather conditions and strong winds.

• The presence of unauthorised personnel.

SET-UP AND WORKING AREA SAFETY

• Do not stand under or allow personnel under the **TORO** lifter when the load is raised, making sure a safety area is blocked around the tower, which should have a diameter of 1.5 times the height of the tower.

• Do not lower the load unless the area below is clear of personnel and obstructions.

• Do not use this lifter outdoors if it is thundering and lightning or in adverse weather conditions. Never use the **TORO** lifter in the event of extreme weather conditions. **NOTE:** Increasing the load surface area will decrease machine stability in windy conditions.

• Never use the **TORO** lifter in strong or gusty wind.

• Avoid transporting the **TORO** lifter over uneven surfaces or ground with debris when in the folded position.

• Never use the lifter on moving surfaces or vehicles.

• The **TORO** lifter must always be set up on firm and even surfaces.

• This material lift is not electrically insulated and does not protect you if it gets close to or comes into contact with electricity.

• If the **TORO** lifter comes into contact with electric cable, keep well away. The tower should not be touched or used until the electricity has been switch off.

• Maintain safe distances away from electrical power lines and apparatus, allowing for mast movement and electrical line sway or sag, in accordance with applicable local governmental regulations.

• Do not use the lifter as a ground for welding.

• The noise made while using this machine should not exceed 80 dB. If it were to make more noise contact your supplier.

• Before installing the lifter, make sure the installation area can hold a minimum point load of 5 times the load to be raised.

LIFTER USE SAFETY INSTRUCTIONS

• The installer is responsible for adhering to the load capacity specified by the manufacturer, the safety requirements in the place of installation and the abilities and experience of co-workers.

• Do not remove the manufacturer's labels; if removed the guarantee will be null and void.

• Always carry out a thorough inspection of your **TORO** lifter before each use by following the pre-operation inspection instructions. Do not use a tower that is damaged or doesn't work properly.

• Never use the **TORO** lifter with a worn, frayed, kinked or damaged winch cable.

• Do not replace parts of the **TORO** lifter that are critical to stability or structure with items of different strength or specification. If it were necessary to replace components, it is important that it is replaced with an original spare part.

• Do not exceed the rated load capacity recommended by the manufacturer GUIL®.

• Do not lift the load unless: the blocking hook is unhooked, the legs are correctly installed and the brakes on the wheels are activated.

• Do not adjust or remove the legs while the load is raised.

• Do not raise the **TORO** lifter unless the load is correctly positioned, centred and secured on the forks. The centre of gravity should always be along a vertical line.

• Never raise objects that make a large surface for the wind. If it is absolutely necessary please contact your dealer or the manufacturer (GUIL®) for safety advice.

• If you are going to leave the **TORO** lifter unattended with a raised load make sure it can't be used by unauthorised personnel. Unauthorised personnel could try to use the tower without adequate training, causing dangerous situations.

• All loads must be secured using a secondary safety system such as slings, cables or chains which must be oversized i.e. have adequate safety margins, to ensure maximum safety.

• Do not subject the **TORO** lifter to a horizontal force or side load by raising or lowering a fixed or overhanging load or resting a ladder or scaffold against any part of the machine.

• Do not use the **TORO** lifter as a personnel lifting platform.

• Do not climb on the mast sections or sit/stand on the forks.

• Do not tamper with the brake winch. For maintenance or repair consult your dealer or the manufacturer.

• Keep hands away from all moving parts and pinch points when operating the tower.

• Do not grasp the winch cable while the tower is being used.

NOTE: When using this material lift in public places or industrial areas, a series of safety instructions have to be followed that this manual can only give in part. The user must therefore inform himself/herself on the current governmental safety instructions and take them into consideration when planning the installation.

PRE-OPERATION INSPECTION

CAUTION! A pre-operation inspection must be carried out before every use of the tower. Check the tower for damage, improperly installed or missing parts and unauthorised modifications using the list below.

Do not use the tower if this inspection reveals any adverse conditions that could affect its safety.

WARNING! If damages or malfunctions are found in either the pre-operation inspection or the function test the tower should be removed from service and repaired by an authorised technician.

Check the following components of the lifter:

- Winch
- Base
- Legs
- Aluminium mast sections
- Cable (kinks, frays or deformations)
- Wheels and castors
- Locking bolts
- Level
- Ensure all labels are in place and legible

Check the whole machine for:

- Dents and damage
- Corrosion or rust
- Cracks in welding

OPERATING INSTRUCTIONS

WARNING! Always use logic and common sense when using the lifter. This is a complex product designed for professional use and should not be operated by amateurs. Ensure all personnel are correctly trained and instructed on the content of the manual and the dangers related with operating the lifter.

SET-UP

Follow the instructions below for the correct installation of the **TORO A** lifter**:**

1.- Position the **TORO** lifter at the desired work site.

2.- Put the lifter in the horizontal position.

3.- Remove the legs and reinsert them into the same sockets in the vertical position.

To remove the leg, pull the safety bolt to unblock it, place the leg in the desired position and release the bolt to block them again and secure the position.

NOTE: The legs have 2 width positions to offer greater stability when raising a wide load or to be used in reduced work areas.

4.- Stand the lifter up again and put the brakes on the leg wheels.

5.- Remove the profile blocking hook by twisting the central part to lengthen it and unhook it from the eye nut.

6.- Hook it on the back part of the mast sections so that it isn’t left loose.

7.- Lastly, put the forks into the horizontal position and secure using the magnetic locking bolts.

8.- Place the load on the forks.

REVERSING THE FORKS

1.- Pull out the magnetic locking bolts.

2.- Remove the forks.

3.- Remove the nut and bolt that holds the fork bracket to the carriage.

4.- Turn the fork bracket 180º, insert back it onto the carriage and secure the nut and bolt again.

5.- Install the forks in the working position.

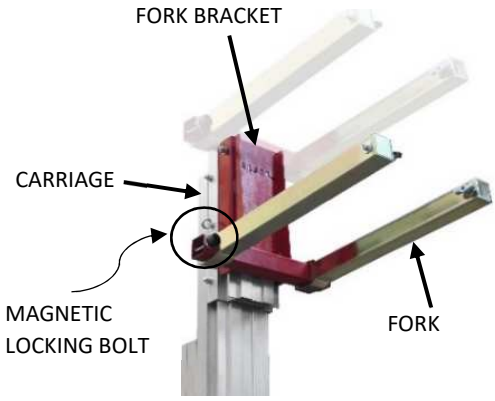

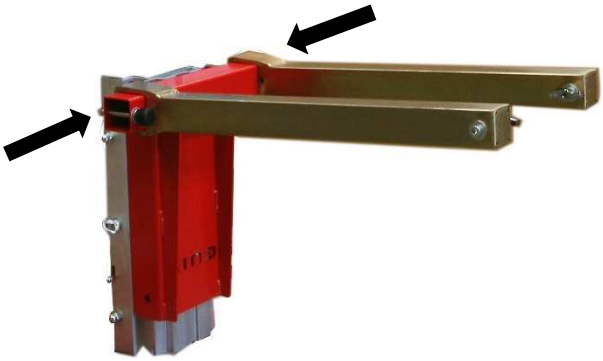

When the forks are in the **working position** they should slope slightly upwards.

6.- Secure using the magnetic locking bolts.

FUNCTION TEST

1.- Place a load on the forks of the lifter.

2.- Raise and lower the lifter to check the following functions.

2.1.- Check that the winch is working correctly:

2.1.1.- It must operate smoothly and free of hesitation, binding or strange noises.

2.1.2.- All components must be present.

2.1.3.- And above all it, must brake perfectly.

2.2.- Ensure that the cable is not worn, has no kinks, frays or serious deformations.

2.3.- And make sure the telescopic profiles raise and lower smoothly. They shouldn't be either tight together nor too loose (with a big gap between them). They should be close-fitting.

MOVING THE LIFTER TO THE WORK AREA

1.- Without the load:

1.1.- In vertical position, using the four wheels on the base steering with the help of the manoeuvring handle.

1.2.- In horizontal position, using the upper and large lower transportation wheels found on the manoeuvring handle. It is very important that you ensure the profiles are locked with the blocking hook before the **TORO** lifter is put into the horizontal position. If this is not done, the telescopic profiles may slide and unfold and could cause serious injury.

2.- With the load:

Your **TORO** lifter is designed to be able to be moved with a load. To do this is imperative that you follow this recommendations:

- Always place the load in the lowest possible position before moving the lifter.
- Make sure the area is levelled and clear of obstructions.
- Ensure the load is secure and properly balanced.
- Keep personnel away from the lifter with the load and always behind the operator's position.
- Move the lifter slowly, avoiding sudden movements.
- The legs must be always fully unfolded. For better stability, legs must be placed in the position that leaves the most separation between them.

WARNING! Moving the lifter with elevated loads should be contained to short distances.

RAISING THE LOAD

Place the working load on the forks as close to the lifter as possible, making sure that the load is totally centred on the forks. Secure the load using slings, cables, chains, etc. **Note:** The maximum load of the lifter depends on the distance from the mast that the load is placed on the forks.

WARNING!

* If the load isn't correctly placed on the forks this could cause a serious accident, or even death.

* Ensure that the load you wish to raise does not exceed the rated load capacity recommended by the manufacturer.

* Ensure the profile blocking hook is not engaged.

1.- To start to raise the load, turn the winch handle in clockwise direction and the profiles will be lifted, making sure the cable is wound onto the drum in an even a tidy fashion. The profiles can unfold in any order.

2.- When you reach the desired height stop turning the winch handle and the winch will hold the profiles in place.

IMPORTANT: Stop turning the winch handle when you notice that the movement becomes stiff. This indicates that the lifter has reached its maximum height. **VERY DANGEROUS:** Forcing the winch at this point could cause serious internal damage to the lifter.

LOWERING THE LOAD

1.- To start to lower the load, turn the winch handle in anti-clockwise direction and the profiles will be lowered.

2.- When you have completely lowered the profiles stop turning the winch handles.

BLOCKING THE LOAD/SAFETY SYSTEMS

• AUTO-BRAKE HAND WINCH

This system automatically blocks the load in place as soon as you stop turning the handles. The resulting braking of the load is directly proportional to the amount of load being lifted.

• **IPB** SYSTEM (Internal Pendulum Brake)

Each mast profile has an incorporated safety brake (called **IPB**) that works automatically by inertia if there were to be a sudden drop in the mast profiles (uncommon in its usual functioning). This system was designed for unlikely situations where the cable becomes loose or breaks.

HOW TO UNBLOCK THE MAST PROFILES IF THE IPB SYSTEM HAS BEEN ACTIVATED

1.- If it is activated due to a kink in the cable or sagging, the profiles must be raised by turning the winch handle clockwise, this way the cable will become tensed again and the safety brake will deactivate automatically, so you can continue to use the tower.

2.- In case of cable breakage:

2.1.- Firstly the load must be removed from the tower.

2.2.- Unblock each mast section, starting with the lowest one, by lifting them slightly, either manually or with the help of a forklift or another sort of lifter. Unblock the IPB system using the releasing.

AFTER EACH USE

1.- Completely lower the forks and remove any adaptor being used that is fixed to them.

2.- Put the forks into the storage position.

3.- Put the lifter in the horizontal position.

4.- Remove the legs and reinsert them in the base in the vertical position.

To remove the leg, pull the safety bolt to unblock it, place the leg in the desired position and release the bolt to block them again and secure the position.

IMPORTANT: Always attach the mast profile blocking hook to the profiles to prevent sliding during horizontal transportation.

5.- Select a safe storage location making sure it is: on a firm and level surface, protected from the elements.

TRANSPORT

• The lifter must be completely stowed and the profile blocking hook activated.

• The transport vehicle must be parked on a level surface.

• The vehicle must be stationary to prevent it from moving whilst loading the **TORO** lifter.

• Make sure the vehicle capacity, the loading space and chains or straps used are sufficient to withstand the weight of the **TORO** manual lift.

• The **TORO** lifter must be secured to the vehicle with straps or slings of adequate load capacity to prevent any movement.

• Place the **TORO** lifter against the vehicle. Use the transportation wheels to help load the tower onto the vehicle.

MAINTENANCE

• Carry out a thorough inspection of the lifter to ensure there are no missing components and that there are no broken or damaged parts.

• Check that the wheels turn smoothly and are not damaged or dented.

• Check that the locking bolts securing the legs work properly.

• Inspect the legs, forks, and strengthening braces to ensure they are in good condition.

• Check that the profile blocking hook functions perfectly.

• Test the safety brake system (**IPB**) by manually raising each mast profile about 15 cm and release. Brakes should engage before the mast section reaches bottom stop. Use the winch to deactivate safety brakes and unblock the mast profiles.

• Check that the winch cable isn't frayed, bent or worn.

• Make sure the winch functions correctly and doesn't show any signs of damage or deformations.

• Raise mast profiles to verify that they slide smoothly.

• Make sure wire sideways and the winch cable are free of dust and rust and grease them periodically, depending on the frequency the lifter is used.

VERY IMPORTANT: Do not grease, lubricate or tamper with the winch. Consult with a GUIL® technician.

• A regular technical inspection of the **TORO** lifter must be carried out (depending on the regulations in your country and the frequency of use of the lifter) by a GUIL® authorised technician, to establish the condition of all its parts.

• Your GUIL® lifter is made with high quality long-lasting components. In the event of having to change a component it is important that it is replaced with an original spare part. GUIL® will not take responsibility for any direct or indirect consequence due to incorrect use, carelessness or bad maintenance. The guarantee will be invalid if non-original components are used or if any modifications are made to the tower.

• Do not replace parts of the **TORO** lifter that are critical to stability or structure with items of different strength or specification. If it were necessary to replace parts, please contact your dealer or the manufacturer GUIL®.

RISK ASSESMENT

Likelihood	L	Low
	M	Medium
	H	High
Severity	SD	Slightly Damaging
	D	Damaging
	ED	Extremely Damaging
Consequence	I	Insignificant Risk
	To	Tolerable Risk
	Mo	Moderate Risk
	H	High Risk
	In	Intolerable Risk

TASK

PRE-OPERATION INSPECTION

EVALUATED MACHINE: **TORO RANGE A**

Identified Risk	Likelihood			Severity			Consequence					Corrective Measures
	L	M	H	SD	D	ED	I	To	Mo	H	In	
LOSS OF EXTERNAL COMPONENTS.	X					X					X	REPLACE THE LOST EXTERNAL COMPONENTS.
DAMAGE TO THE HAND WINCH.		X				X					X	CONSULT A GUIL TECHNICIAN.
DETERIORATION OF THE STEEL CABLE.			X			X					X	CONSULT A GUIL TECHNICIAN.
DETERIORATION OF THE MAST PROFILES.		X				X					X	CONSULT A GUIL TECHNICIAN.
BADLY SECURED CABLE.			X			X					X	SECURE CABLE AS INDICATED BY THE MANUFACTURER.
BROKEN COMPONENTS.		X				X					X	REPARE BROKEN COMPONENTS.
DAMAGE TO SURFACE TREATMENT.	X							X				CONSULT A GUIL TECHNICIAN.
MISSING LABELS.			X			X			X			REPLACE LABELS.

TASK

LIFTER SET-UP

EVALUATED MACHINE: **TORO RANGE A**

Identified Risk	Likelihood			Severity			Consequence					Corrective Measures
	L	M	H	SD	D	ED	I	To	Mo	H	In	
UNLEVEL OR DETERIORATED GROUND.		X				X					X	INSTALL SUPPORT ELEMENTS.
UNSTABLE OR SLIPPERY GROUND.		X				X					X	INSTALL BLOCKING ELEMENTS.
OVERHEAD OBSTACLES.		X				X					X	ENSURE THAT NOTHING CAN BREAK OFF OR FALL DOWN.
PRESENCE OF HIGH OR LOW VOLTAGE CABLES.			X			X					X	PREVENT ANY CONTACT WITH ELECTRIC CABLES.
BAD WEATHER CONDITIONS.		X				X					X	DO NOT SET UP.
UNPREDICTABLE WEATHER CONDITIONS.			X			X				X		USE EXTRA SAFETY PRECAUTIONS.
THE LEGS DO NOT LOCK INTO THE HORIZONTAL POSITION.	X					X					X	1.- DO NOT LIFT. 2.- CONSULT A GUIL TECHNICIAN.
UNQUALIFIED PERSONNEL.		X				X					X	COMPLETELY PROHIBITED.

TASK

USING THE LIFTER

EVALUATED MACHINE: **TORO RANGE A**

Identified Risk	Likelihood			Severity			Consequence					Corrective Measures
	L	M	H	SD	D	ED	I	To	Mo	H	In	
LOAD INSUFFICIENTLY SECURED TO THE LIFTER.		X				X					X	SECURE THE LOAD CORRECTLY.
UNEVEN WRAPPING OF THE CABLE IN THE WINCH DRUM.		X			X				X			UNWIND THE CABLE AND WIND IT EVENLY BACK ONTO THE DRUM.
THE LOAD SURPASSES THE MAXIMUM PERMITTED LOAD SPECIFIED BY THE MANUFACTURER.			X			X					X	1.- DO NOT LIFT. 2.- REMOVE THE SURPLUS LOAD. 3.- CONSULT TECHNICAL SPECIFICAITONS.
DISPLACED LOAD.			X			X					X	CENTER THE LOAD.
THE TELESCOPIC MASTS WON'T RAISE.		X				X					X	1.- REMOVE THE PROFILE BLOCKING HOOK. 2.- ENSURE THE CABLE IS SECURED TO THE WINCH DRUM. 3.- CONSULT A GUIL TECHNICIAN.
DIFFICULTIES IN MOVING THE LIFTER / NO LOAD.		X				X				X		1.- UNBLOCK THE BRAKES ON THE WHEELS. 2.- CHECK THERE IS NOTHING IMPEDING THE LIFTER BEING MOVED. 3.- CONSULT A GUIL TECHNICIAN.
DIFFICULTIES IN MOVING THE LIFTER / WITH LOAD.		X				X					X	1.- UNLOCK THE BRAKES ON THE WHEELS. 2.- CHECK THERE IS NOTHING IMPEDING THE LIFTER BEING MOVED. 3.- CONSULT A GUIL TECHNICIAN.
THE MASTS START TO RAISE CROOKED (NOT STRAIGHT).		X				X					X	1.- DO NOT MOVE OR RAISE. 2.- CONSULT A GUIL TECHNICIAN.
THE MAST PROFILES WON'T LOWER.	X					X					X	1.- ENSURE THAT THE PENDULUM BRAKE (IPB SYSTEM) IS NOT ENGAGED, BLOCKING THE MAST PROFILES. 2.- ENSURE THE LIFTER IS NOT OVERLOADED. 3.- CONSULT A GUIL TECHNICIAN.
CROOKED RAISING WHEN USING TWO OR MORE LIFTERS CONNECTED.		X				X				X		SYNCRONISE THE RAISING, IN SPEED AND HEIGHT.
CROOKED LOWERING WHEN USING TWO OR MORE LIFTERS CONNECTED BY A LOAD.	X					X					X	SYNCRONISE THE LOWERING, IN SPEED AND HEIGHT.
A NON-AUTHORISED PERSON HAS TRIED TO USE THE LIFTER WITH A RAISED LOAD.			X			X					X	1.- CORDON OFF THE WORK SPACE AS A RESTRICTED AREA. 2.- REMOVE THE WINCH HANDLE.
IMMINENT FALLING OF THE LIFTER.			X			X				X		EVACUATE PERSONNEL.

TASK **MAINTENANCE OF THE LIFTER**												
EVALUATED MACHINE: **TORO RANGE A**												
Identified Risk	Likelihood			Severity			Consequence					Corrective Measures
	L	M	H	SD	D	ED	I	To	Mo	H	In	
THE LIFTER IS DIRTY.			X			X					X	CLEAN IT AND GREASE THE APPROPRIATE PARTS.
DAMAGED OR WORN WINCH.		X				X					X	CONTACT THE MANUFACTURER.
STORAGE AREA IN BAD CONDITION.		X			X					X		PROTECT THE LIFTER CORRECTLY.
LACK OF AWARENESS OF THE MAINTENANCE REQUIRED FOR THE LIFTER.		X			X					X		CONSULT THE INSTRUCTION MANUAL OR CONTACT THE MANUFACTURER.
MISSING LABELS.			X			X			X			REPLACE LABELS.
LOSS OF MANUAL.			X			X			X			REPLACE INSTRUCTION MANUAL OR CONTACT THE MANUFACTURER.
CHANGE COMPONENTS.		X				X				X		ORDER ORIGINAL REPLACEMENTS.
FULL REVISION AND SERVICING OF THE LIFTER.			X			X					X	THIS MUST BE CARRIED OUT BY A TECHNICIAN AUTHORISED BY GUIL.

TASK **TRANSPORTATION OF THE LIFTER**												
EVALUATED MACHINE: **TORO RANGE A**												
Identified Risk	Likelihood			Severity			Consequence					Corrective Measures
	L	M	H	SD	D	ED	I	To	Mo	H	In	
LEGS NOT SECURED.		X				X				X		BLOCK THEM WITH THE LOCKING BOLTS.
MAST SECTIONS NOT FULLY LOWERED.	X				X					X		LOWER THE MAST SECTIONS AND SECURE THEM WITH THE BLOCKING HOOK.
CABLE LOOSE.		X			X					X		WIND THE CABLE PROPERLY ONTO THE WINCH DRUM.
DAMAGED WHEELS.	X					X					X	CHANGE WHEELS.
WINCH HANDLE STICKS OUT.			X		X				X			POSITION THE TOWER TO PREVENT DAMAGE TO THE HANDLE.
LIFTER LOOSE IN THE TRANSPORT VEHICLE.		X				X					X	SECURE THE LIFTER WITH SLINGS OR ROPES.
THE LIFTER CANNOT BE LOADED INTO THE VEHICLE.		X				X					X	USE SUITABLE LIFTING TECHNIQUES.

GUARANTEE

At GUIL, we take special care when designing and manufacturing all our products, imposing rigorous quality controls during each and every one of the manufacturing and assembly processes. As a result, our products are covered by the GUIL guarantee in the event of manufacturing or material defects.

Cover and duration of the guarantee:

1. All our products are guaranteed against any manufacturing defect for a period of 36 months from the date of issue of the invoice.

2. The guarantee covers only the replacement of the defective parts and labour costs.

3. Transport will always be at the buyer's expense. Shipment of goods for repair under guarantee must be made Freight Paid, and must include a detailed description of the defects or damage observed. Any shipment sent Freight Forward will be rejected by our staff.

4. In the case of special products manufactured by GUIL to customer specifications, or from drawings or models, GUIL takes no responsibility for the technical quality of such special products. In any case, the products in question are not covered by the guarantee.

Exceptions to the guarantee:

- Defects or damage resulting from loss, theft, fire or any other cause beyond GUIL's control or responsibility.
- Defects or damages due to improper handling, negligence or accident.
- Defects or damage due to normal wear and tear or age in the product.
- Defects or damage caused by incorrect use (blows, deformation).
- Alterations, manipulations or repairs carried out by third parties who are not authorised GUIL dealers (products that have undergone modifications by the customer without the express consent of GUIL).
- In the case of components manufactured by third-party companies, the guarantee will be that set by the manufacturer of each component.
- The use of components not authorised by GUIL renders the guarantee null and void.

THE MANUFACTURER:

GUIL®
ES-B96498829
P.I. LA CREU C/ ISMAEL TOMÁS ALACREU, 28
46250 L'ALCUDIA (VALENCIA) SPAIN
Tel. + 34 962996500 Fax. + 34 962540833
www.guil.es info@guil.es sales@guil.es

ANEXO / *ANNEX*

ELEVADORES DE CARGA

MATERIAL LIFTERS

TORO A-102/C
TORO A-101/C

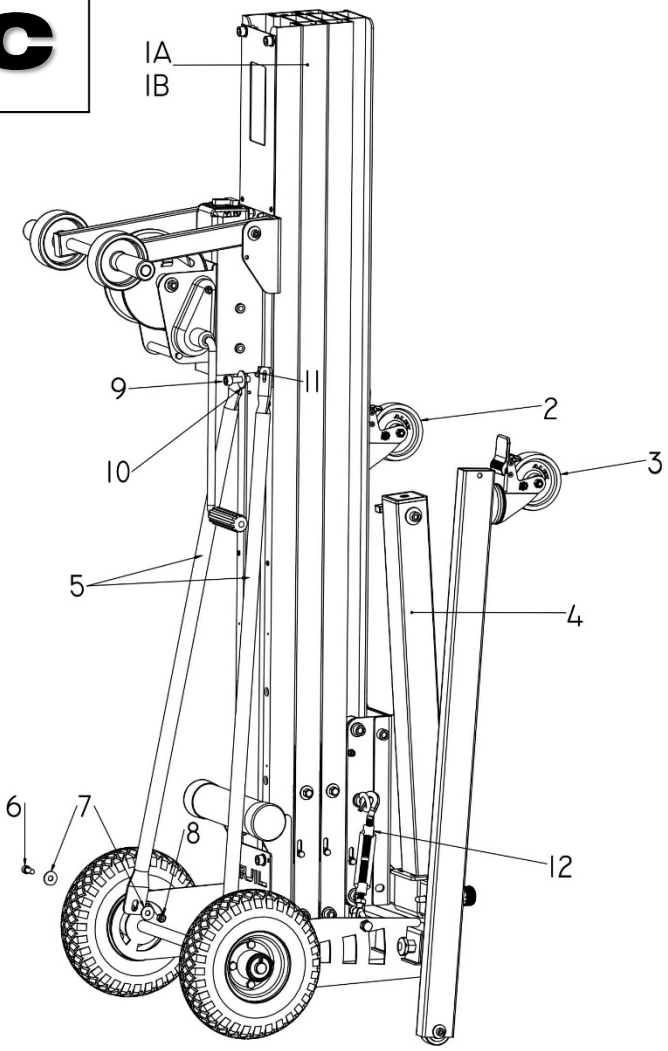

GUIL®

ENGINEERING FOR LIFTING LOADS

CONTENIDO / *INDEX*

INTRODUCCIÓN / *INTRODUCTION* A1

MEDIDAS / *MEASUREMENTS* A2

DIAGRAMA DE CARGA / *LOAD CHART* A3

PLANOS DE DESPIECE / *EXPLODED DRAWINGS* A5

DECLARACIÓN DE CONFORMIDAD CE / *EC-CERTIFICATE OF CONFORMITY* A20

LIBRO DE MANTENIMIENTO / *MAINTENANCE RECORD* A21

INTRODUCCIÓN / *INTRODUCTION*

El presente documento es un anexo al **Manual del Usuario**, por lo que se han de aplicar también todas las normas, advertencias, sugerencias, etc. que en él se facilitan.

Con este anexo se pretende ampliar la información sobre el elevador **TORO** y facilitar tanto su uso, como la petición de piezas de repuesto.

Ante cualquier duda o problema, no dude en ponerse en contacto con el fabricante GUIL®.

---

*This document is an annex to the **User Manual** and therefore the rules, warnings, suggestions etc. that are found in that document must also be applied to this document.*

*This annex intends to add to the information of the **TORO** lifter and is not only to give a greater understanding of its use but also to be consulted when spare parts are required.*

If you have any doubts or issues, do not hesitate to contact the manufacturer GUIL®.

MEDIDAS / *MEASUREMENTS*

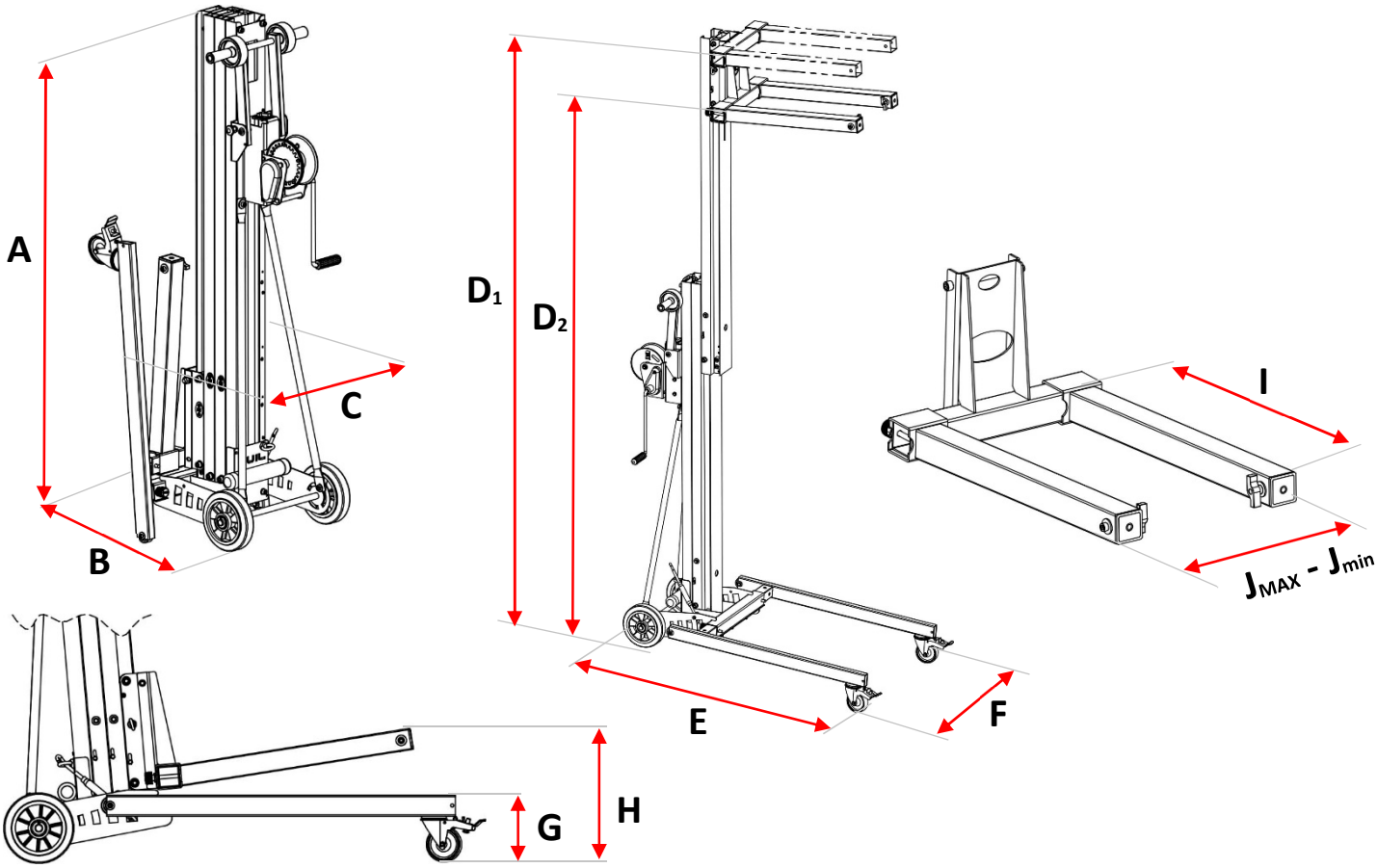

TORO Serie – A / *TORO A - Range*			TORO A-101/C	TORO A-102/C
PLEGADA / *STOWED*				
Altura / *Height* (cm / *ft*)		A	175 / *5.7*	175 / *5.7*
Longitud / *Length* (cm / *ft*)		B	75 / *2.5*	75 / *2.5*
Ancho / *Width* (cm / *ft*)		C	62 / *2*	62 / *2*
DESPLEGADA / *WORKING MEASUREMENTS*				
Altura máxima / *Maximum height* (cm / *ft*)	Horquillas subidas / *Forks up*	D_1	290 / *9.5*	410 / *13.4*
	Horquillas bajadas / *Forks down*	D_2	265 / *8.6*	380 / *12.5*
Longitud / *Length* (cm / *ft*)		E	140 / *4.6*	140 / *4.6*
Ancho máximo / *Maximum width* (cm / *ft*)		F_{MAX}	79 / *2.6*	79 / *2.6*
Ancho mínimo / *Minimum width* (cm / *ft*)		F_{min}	62 / *2*	62 / *2*
Altura de las patas / *Leg height* (cm / *ft*)		G	19 / *0.62*	19 / *0.62*
Altura de carga / *Load height* (cm / *ft*)		H	33 / *1.1*	33 / *1.1*
HORQUILLAS / *FORKS*				
Longitud / *Length* (cm / *in*)		I	66 / *26*	66 / *26*
Ancho máximo / *Maximum width* (cm / *in*)		J_{MAX}	43 / *16.9*	43 / *16.9*
Ancho mínimo / *Minimum width* (cm / *in*)		J_{min}	30.5 / *12*	30.5 / *12*
Número de perfiles / *Number of sections*			2	3
Carga máxima / *Maximum load* (kg / *lbs*)			170 / *375*	150 / *331*
Peso / *Weight* (kg / *lbs*)			67.5 / *149*	77.5 / *171*

DIAGRAMA DE CARGA / *LOAD CHART*

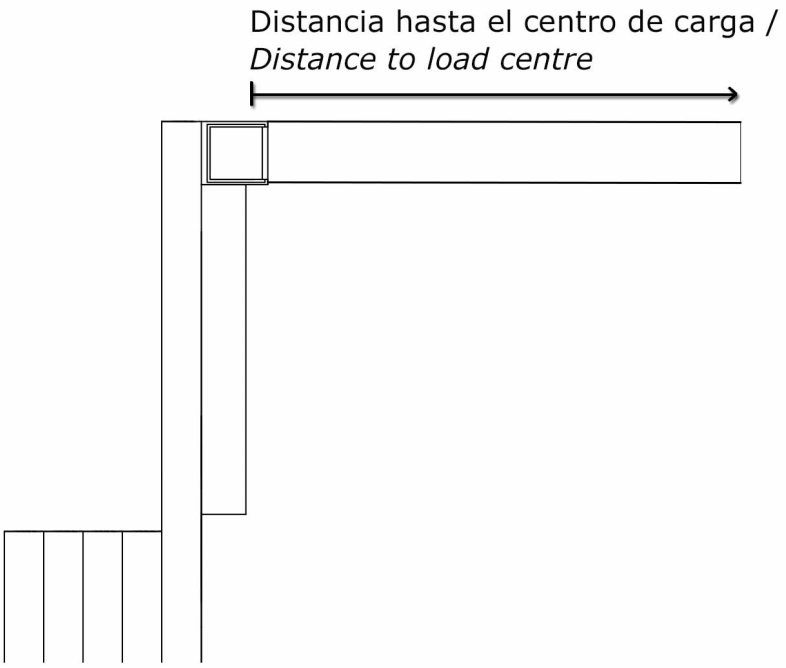

TORO A-102/C

CARGA MÁXIMA: 150 kg / *MAXIMUM LOAD: 331 lbs*

ALTURA MÁXIMA: 4,10 m / *MAXIMUM HEIGHT: 13.4 ft*

Distancia / *Distance* (cm / *in*)	Carga / *Load* (kg / *lbs*)
0 / *0*	150 / *331*
10 / *4*	150 / *331*
20 / *8*	150 / *331*
30 / *12*	150 / *331*
40 / *16*	150 / *331*
50 / *20*	130 / *287*
60 / *24*	110 / *243*

TORO A-101/C

CARGA MÁXIMA: 170 kg / *MAXIMUM LOAD: 375 lbs*

ALTURA MÁXIMA: 2,90 m / *MAXIMUM HEIGHT: 9.5 ft*

Distancia / *Distance* (cm / *in*)	Carga / *Load* (kg / *lbs*)
0 / *0*	170 / *375*
10 / *4*	170 / *375*
20 / *8*	170 / *375*
30 / *12*	170 / *375*
40 / *16*	170 / *375*
50 / *20*	150 / *331*
60 / *24*	130 / *287*

Ref.	Adaptadores / *Adaptors* Denominación / *Description*	Distancia hasta el centro de carga / *Distance to load centre*
 **HRT-01**	JUEGO DE HORQUILLAS / *FORKS*	de 0 a 66 cm *from 0 to 26 in*
 **ACT-01/L**	ADAPTADOR PARA CARGAS DE DISEÑO CURVO / *PIPE CRADLE*	29 cm *11.4 in*
 **ACT-04/L**	PLATAFORMA DE CARGA / *LOAD PLATFORM*	de 0 a 63 cm *from 0 to 24.8 in*
 **ACT-06**	ADAPTADOR PARA PERSIANAS Y PUERTAS ENROLLABLES / *ADAPTOR TO INSTALL ROLLER DOOR AND WINDOW SHUTTERS*	de 0 a 60 cm *from 0 to 23.6 in*

PLANOS DE DESPIECE / *EXPLODED DRAWINGS*

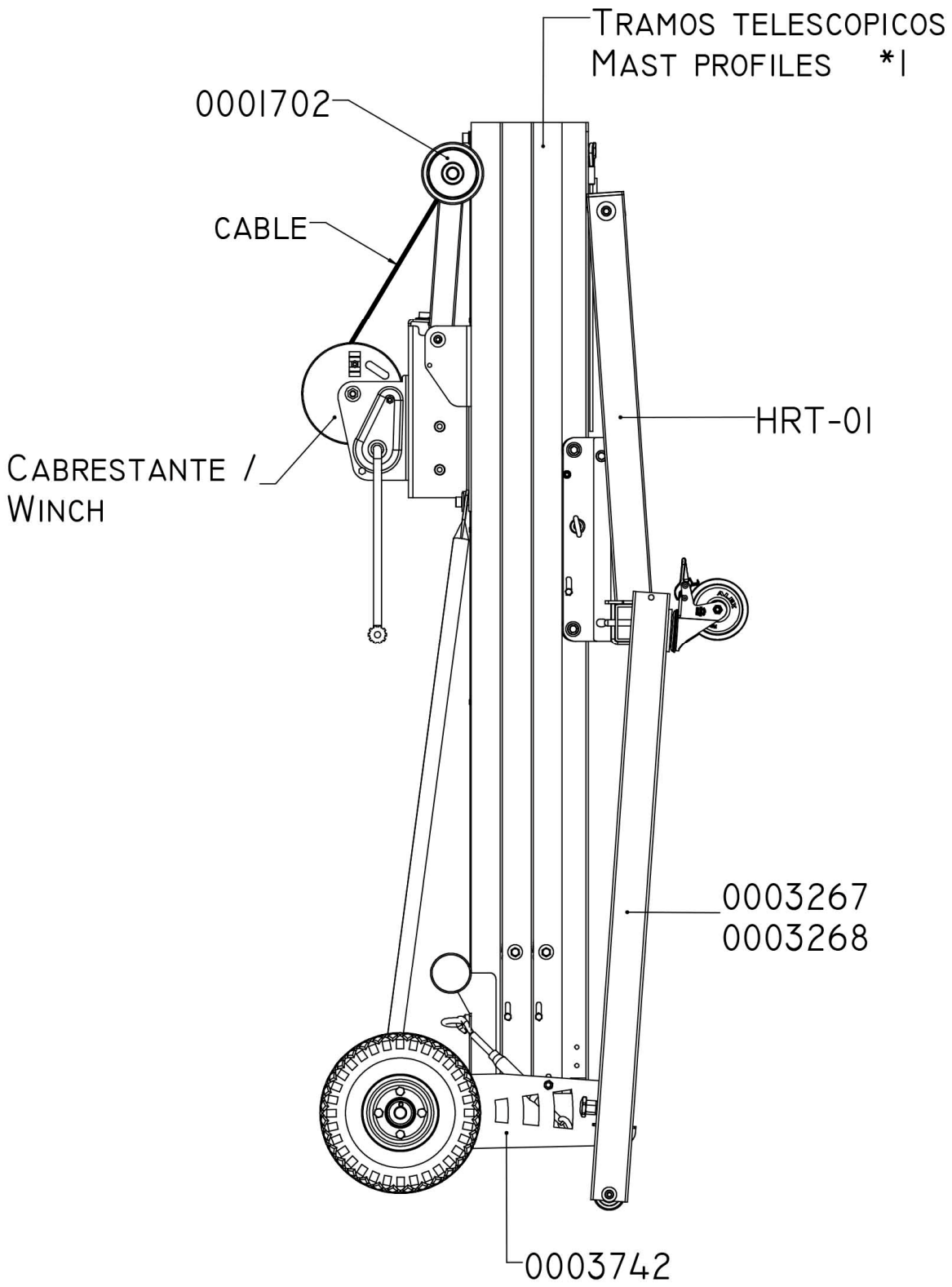

*1: El número de perfiles dependerá del modelo del elevador.

The number of profiles will depend on the lifter's model.

ÍNDICE / *INDEX*

PÁG. / PAGE

Nr. 1: REF. TORO A-102/C – TORO A-102/C ELEVADOR COMPLETO / *TORO A-102/C COMPLETE LIFTER* A7

REF. TORO A-101/C – TORO A-101/C ELEVADOR COMPLETO / *TORO A-101/C COMPLETE LIFTER* A7

Nr. 2: REF. 0003154 - PERFILES ENSAMBLADOS TORO A-102/C */ ASSEMBLED PROFILES TORO A-102/C*..... A8

REF. 0003054 - PERFILES ENSAMBLADOS TORO A-101/C */ ASSEMBLED PROFILES TORO A-101/C*..... A8

Nr. 3: REF. HRT-01 - JUEGO DE HORQUILLAS Y FRONTIS / *FORK BRACKET AND FORKS*..... A10

Nr. 4: REF. 0003106 - COMPONENTES CARRITO / *FORK CARRIAGE COMPONENTS*..... A11

Nr. 5: REF. 0002502 - COMPONENTES TRAMO I / *1st PROFILE COMPONENTS*..... A12

Nr. 6: REF. 0002504 - COMPONENTES TRAMO II DERECHA / *2nd PROFILE COMPONENTS - RIGHT* A14

Nr. 7: REF. 0002508 - COMPONENTES TRAMO III IZQUIERDA / *3nd PROFILE COMPONENTS – LEFT*..... A16

REF. 0002509 - COMPONENTES TRAMO III DERECHA / *3nd PROFILE COMPONENTS - RIGHT* A16

Nr. 8: REF. 0003742 - BASE TORO A / *BASE TORO A* A18

Nr. 9: REF. 0001702 - RUEDAS ABATIBLES / *TRANSPORTATION WHEELS* A18

Nr. 10: REF. 0003267 - PATA IZQUIERDA / *LEFT STABILISER LEG*..... A19

Nr. 11: REF. 0003268 - PATA DERECHA / *RIGHT STABILISER LEG* A19

Nr. 1: REF. TORO A-102/C – TORO A-102/C ELEVADOR COMPLETO / *TORO A-102/C COMPLETE LIFTER*
REF. TORO A-101/C – TORO A-101/C ELEVADOR COMPLETO / *TORO A-101/C COMPLETE LIFTER*

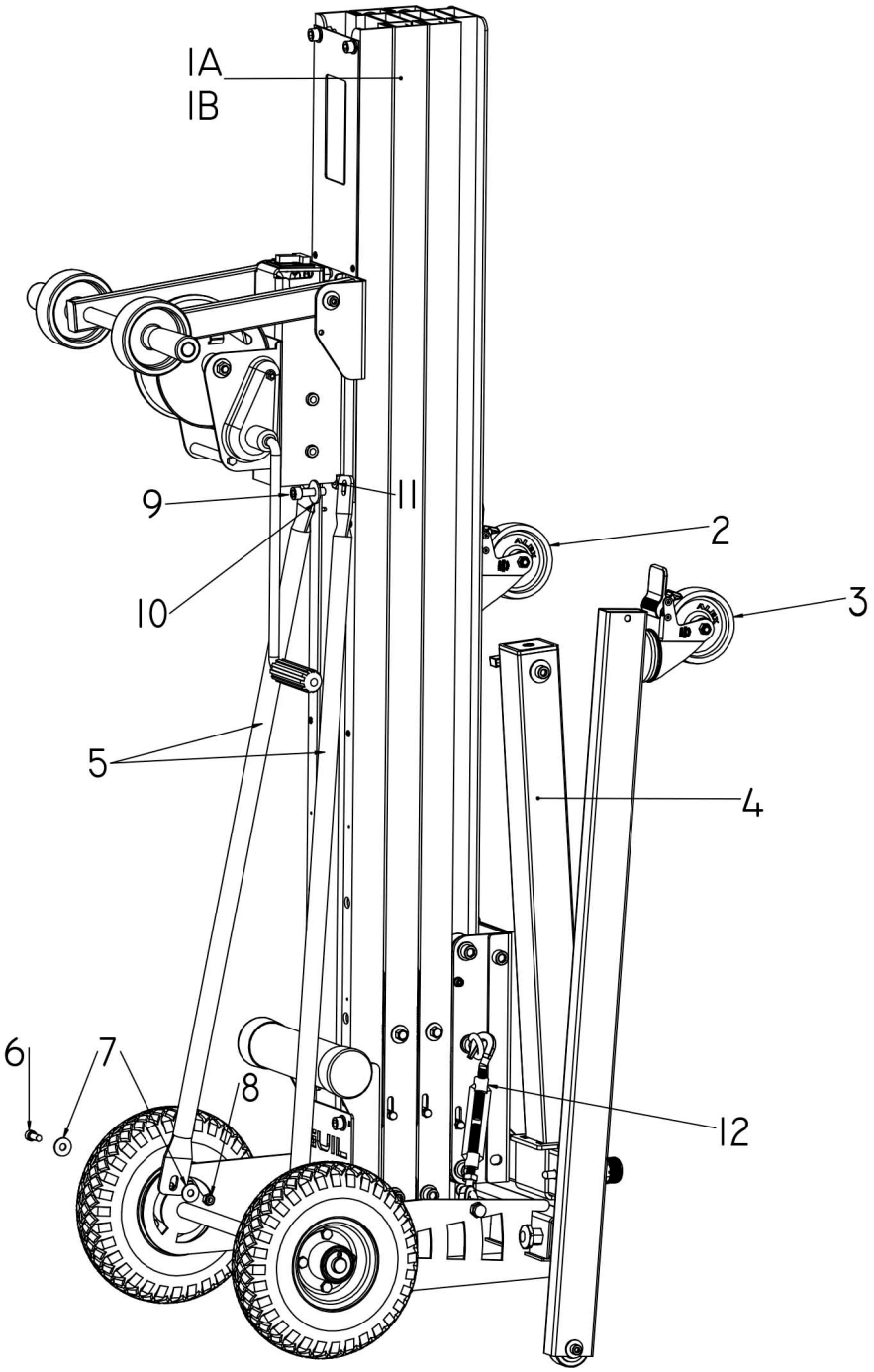

NUM	REF	DENOMINACIÓN / DESCRIPTION	CANT/QTY	PÁG/PAGE
1A	0003154	PERFILES ENSAMBLADOS TORO A-102/C	1	7
1B	0003054	PERFILES ENSAMBLADOS TORO A-101/C	1	7
2	0003267	PATA IZQUIERDA TORO A	1	18
3	0003268	PATA DERECHA TORO A	1	18
4	HRT-01	JUEGO DE HORQUILLAS Y FRONTIS TORO B	1	9
5	0003654	TENSOR TORO A	2	-
6	0000320	TORNILLO DIN912 M08X020 8.8 ZN	2	-
7	0000140	ARANDELA DIN9021 M08 ZN	4	-
8	0000080	TUERCA DIN985 M08 ZN	2	-
9	0000660	TORNILLO DIN912 M10X035 8.8 ZN	2	-
10	0000194	ARANDELA DIN9021 M10 ZN	2	-
11	0000195	TUERCA DIN985 M10 ZN	2	-
12	0003735	TENSOR BLOQUEO TRANSPORTE	1	-

Nr. 2:	REF. 0003154 - PERFILES ENSAMBLADOS TORO A-102/C / *ASSEMBLED PROFILES TORO A-102/C* REF. 0003054 - PERFILES ENSAMBLADOS TORO A-101/C / *ASSEMBLED PROFILES TORO A-101/C*

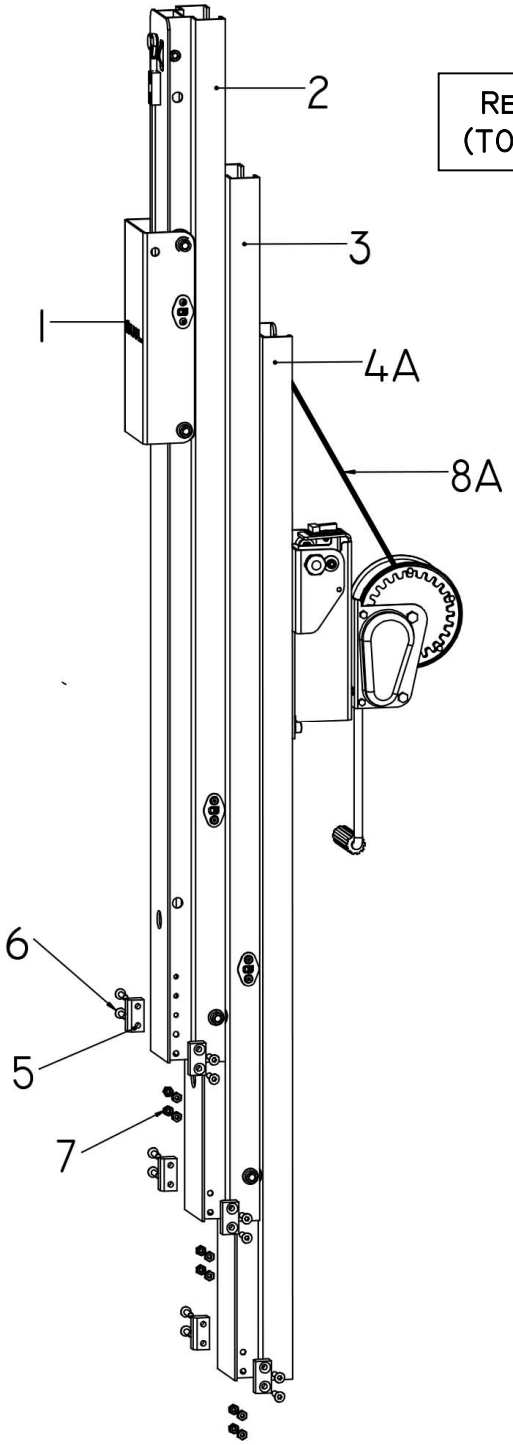

REF. 0003154
(TORO A-102/C)

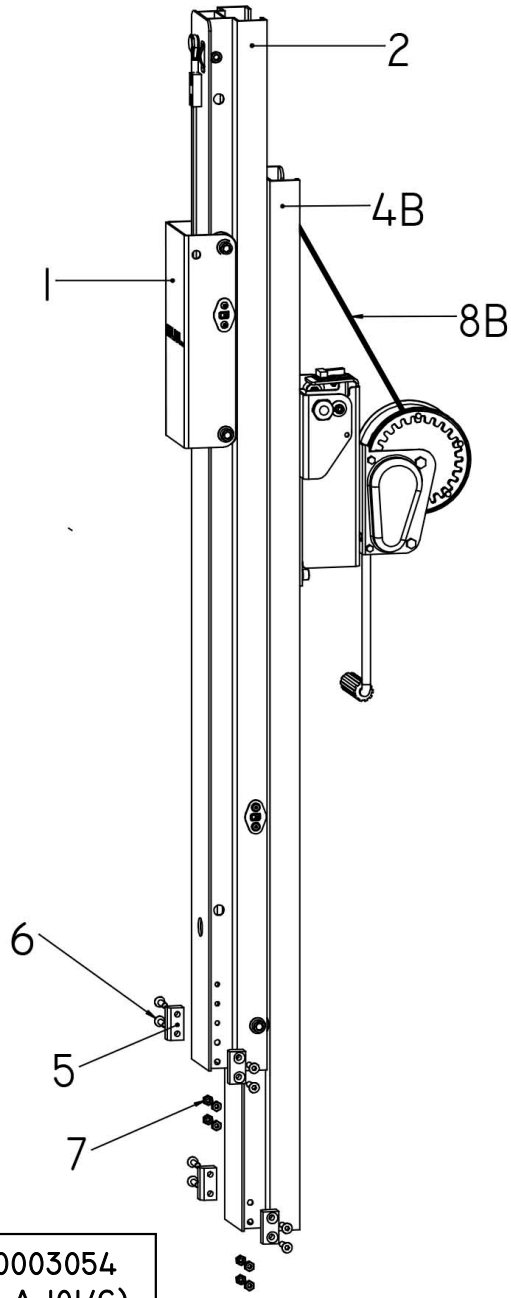

REF. 0003054
(TORO A-101/C)

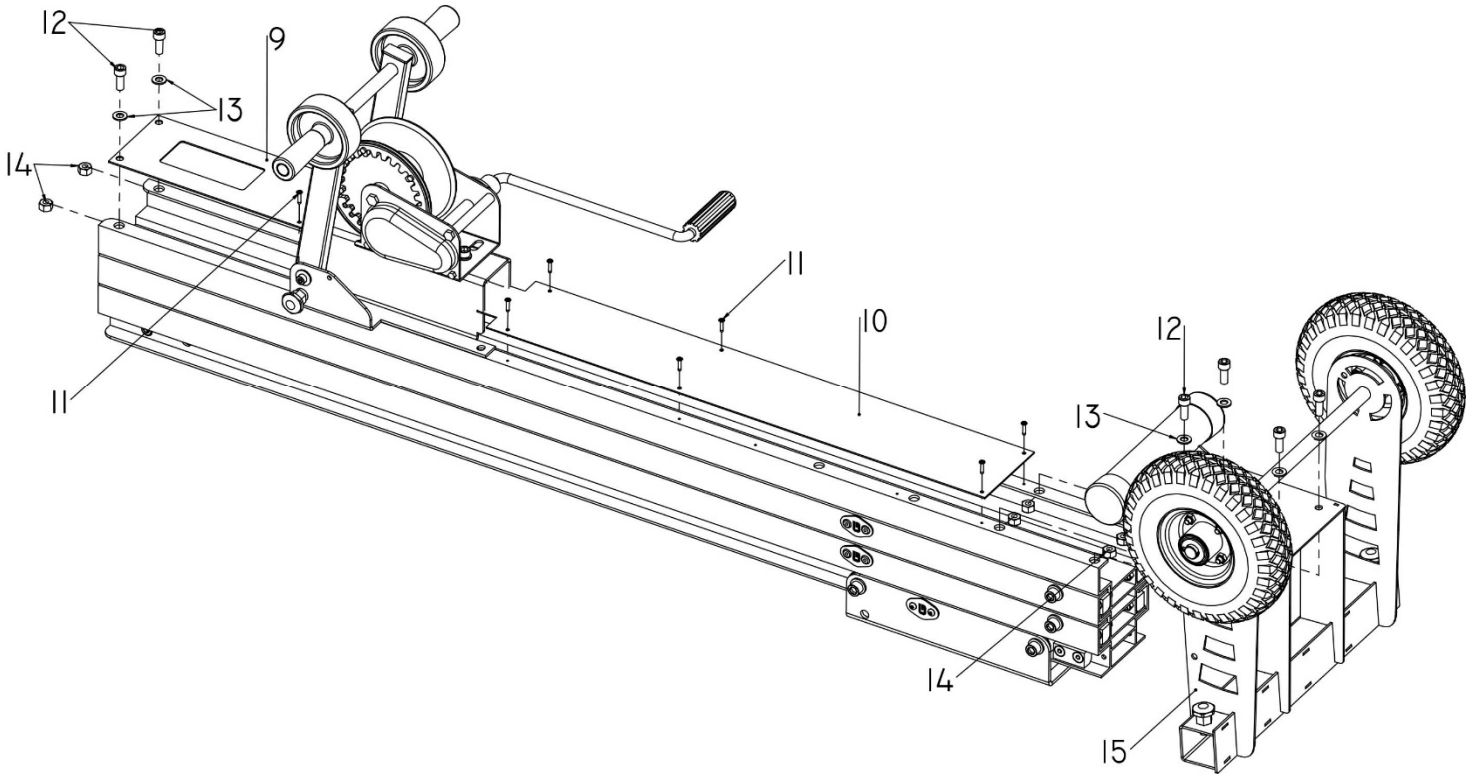

NUM	REF	DENOMINACIÓN / DESCRIPTION	CANT/QTY		PÁG/PAGE
			TORO A-102/C 0003154	TORO A-101/C 0003054	
1	0003106	MONTAJE CARRITO TORO B	1	1	10
2	0002502	MONTAJE TRAMO I TORO A Y B	1	1	11
3	0002504	MONTAJE TRAMO II DERECHA TORO B	1	-	13
4A	0002508	MONTAJE TRAMO III IZQUIERDA TORO B	1	-	15
4B	0002509	MONTAJE TRAMO III DERECHA TORO B	-	1	15
5	0000658	TOPE INFERIOR ULK XL	6	4	-
6	0001160	TORNILLO DIN7991 M08X35 10.9 ZN	12	8	-
7	0000080	TUERCA DIN985 M08 ZN	12	8	-
8A	CBL-TORO B-201/C	CABLE 07X19+0 DIAM. 5MM LONG. 10 M	1	-	-
8B	CBL/TORO A	CABLE 07X19+0 DIAM. 5MM LONG. 7.5 M	-	1	-
9	0001501	PLANCHA SUPERIOR ULK 500	1	1	-
10	0003211	PLANCHA INFERIOR TORO A	1	1	-
11	0001687	REMACHE DIN7337 4,0X16 ALUMINIO	8	8	-
12	0000166	TORNILLO DIN912 M10X025 8.8 ZN	6	6	-
13	0000144	ARANDELA DIN125 M10 ZN	6	6	-
14	0000195	TUERCA DIN985 M10 ZN	6	6	-
15	0003155	MONTAJE BASE TORO A	1	1	17

Nr. 3: REF. HRT-01 - JUEGO DE HORQUILLAS Y FRONTIS / *FORK BRACKET AND FORKS*

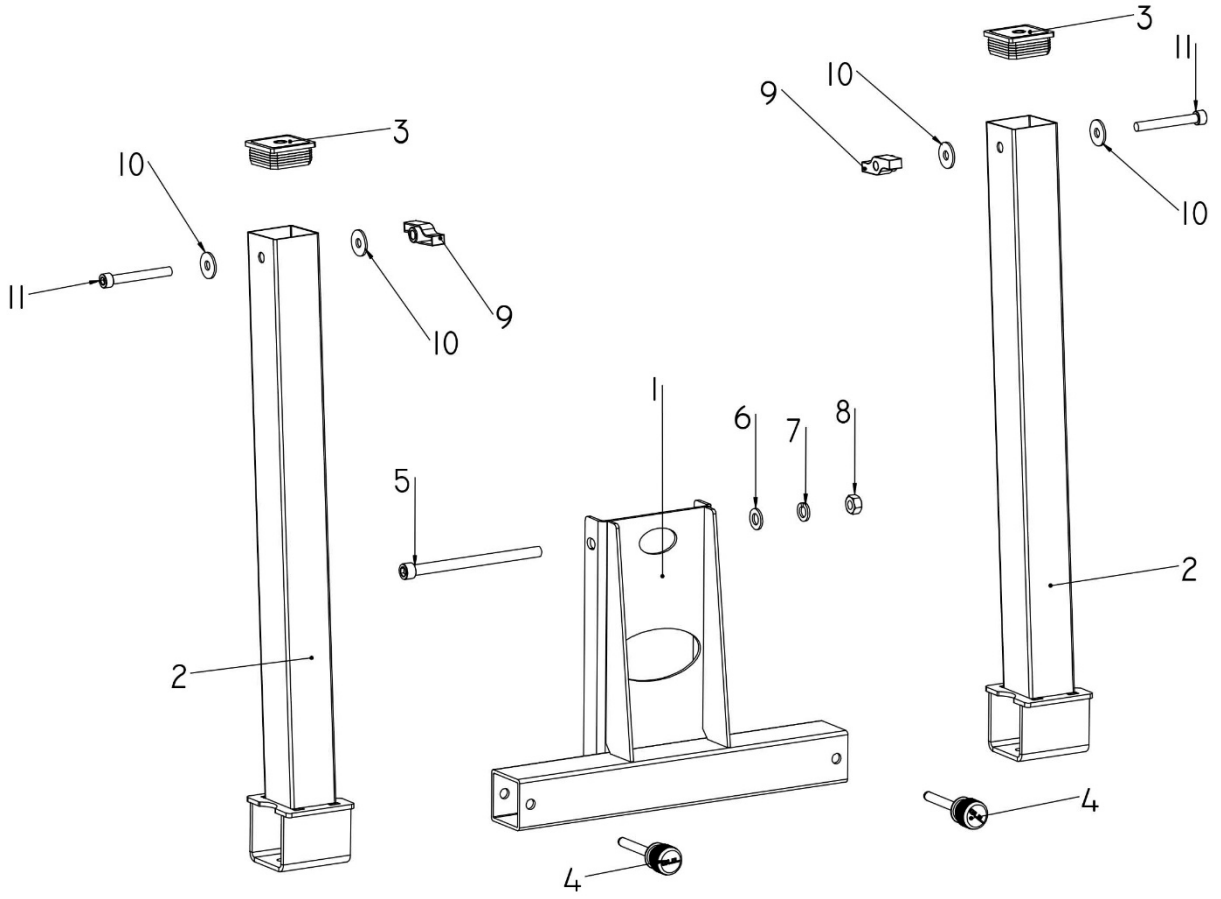

NUM	REF	DENOMINACIÓN / DESCRIPTION	CANT/QTY
1	0002917	FRONTIS TORO B	1
2	0003412	HORQUILLA TORO	2
3	0002897	TACO ROSCADO 60X60X1,5 M10	2
4	0002333	PASADOR IMANTADO CORTO	2
5	0002323	TORNILLO DIN912 M12X170 8.8 ZN	1
6	0000078	ARANDELA DIN125 M12 ZN	1
7	0000182	ARANDELA DIN127 M12 ZN	1
8	0001187	TUERCA DIN934 M12 ZN	1
9	0000336	PALOMILLA 6X24 M10 PASANTE CINCADA	2
10	0000194	ARANDELA DIN9021 M10 ZN	4
11	0002339	TORNILLO DIN912 M10X080 8.8 ZN	2

Nr. 4: REF. 0003106 - COMPONENTES CARRITO / *FORK CARRIAGE COMPONENTS*

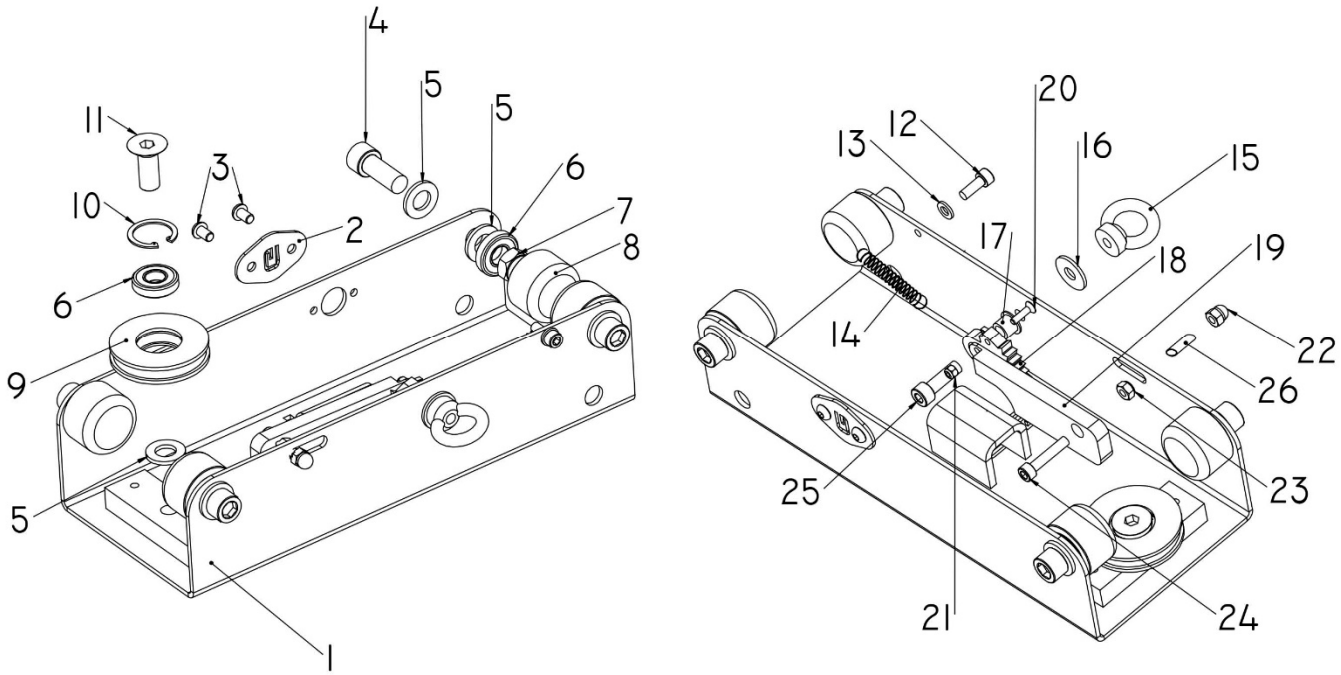

NUM	REF	DENOMINACIÓN / DESCRIPTION	CANT/QTY
1	0002909	SOLDADURA CARRITO TORO A	1
2	0002183	TAPITA ALUMINIO LETRA G	1
3	0002346	TORNILLO ISO7380 M06X010 10.9 ZN	2
4	0001437	TORNILLO DIN912 M12X030	4
5	0000078	ARANDELA DIN125 M12 ZN	9
6	0000073	RODAMIENTO RADIAL 012X28X07	5
7	0000077	TUERCA DIN985 M12 ZN	4
8	0001256	RUEDA GUIA ULK 500	4
9	0001599	POLEA INFERIOR DE 60 ULK 500	1
10	0000072	ANILLO SEGURIDAD DIN472 I28	1
11	0001081	TORNILLO DIN7991 M12X030 10.9 ZN	1
12	0000076	TORNILLO DIN912 M06X016 8.8 ZN	1
13	0000026	ARANDELA DIN125 M06 ZN	1
14	0001141	MUELLE TRACCION 56X8X82X0,5	1
15	0002341	CANCAMO DIN582 M08 GALVANIZADO	1
16	0000140	ARANDELA DIN9021 M08 ZN	1
17	0001140	CASQUILLO GARRA SEGURO ULKXL	1
18	0001309	GARRA SEGURO ULK 500	1
19	0001308	PENDULO SEGURO ULK 500	1
20	0001143	TORNILLO DIN7991 M04X16 10.9 ZN	1
21	0001142	TUERCA DIN985 M04 ZN	1
22	0000826	TUERCA DIN1587 M06 ZN	1
23	0000445	TUERCA DIN985 MO6 ZN	1
24	0001145	TORNILLO DIN912 M06X030 8.8 ZN	1
25	0000224	TORNILLO DIN912 M08X025 8.8 ZN	1
26	0002775	TUBO TERMORETRACTIL 9.5 MM ROJO	16 MM

Nr. 5: REF. 0002502 - COMPONENTES TRAMO I / *1st PROFILE COMPONENTS*

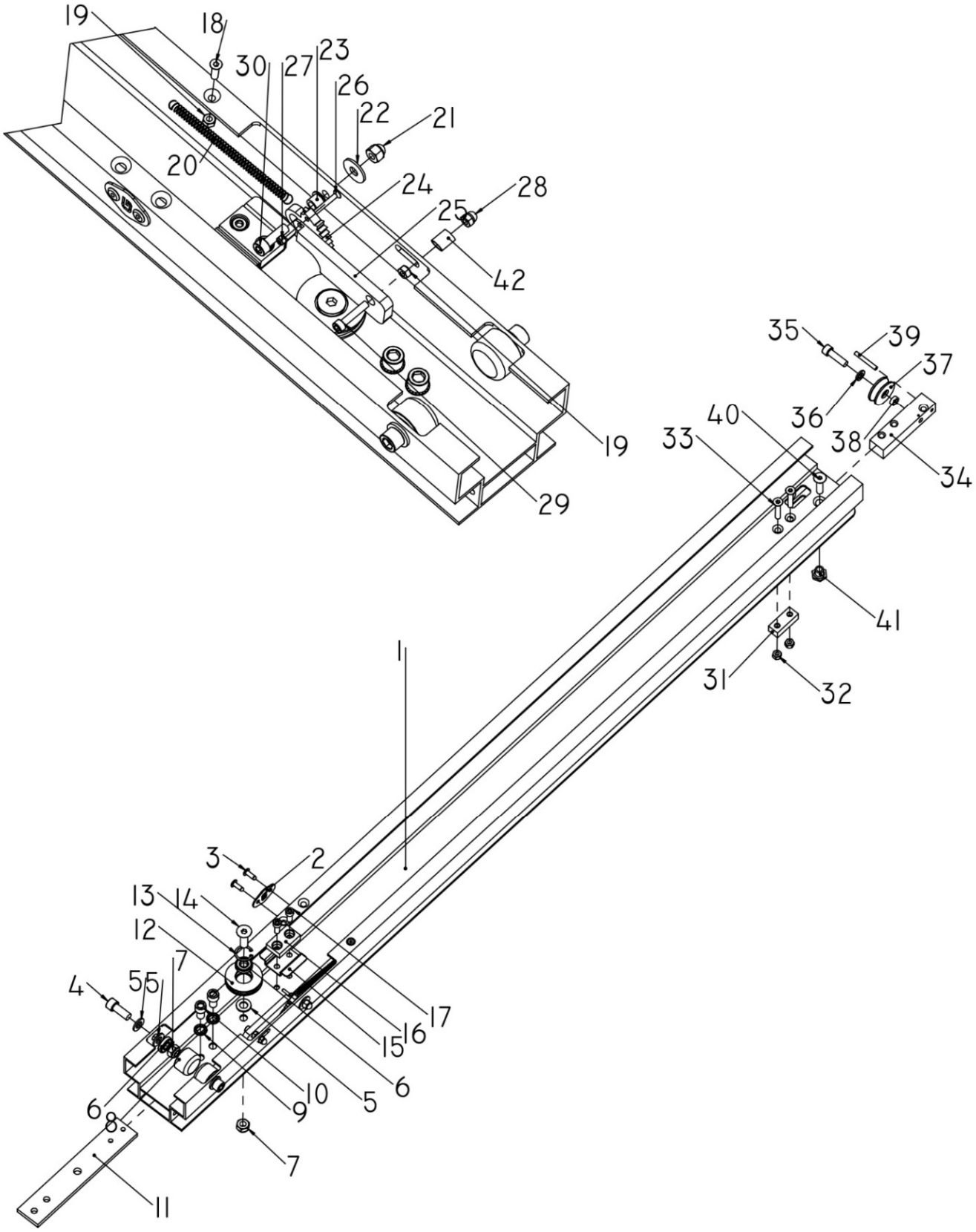

NUM	REF	DENOMINACIÓN / DESCRIPTION	CANT/QTY
1	0001487	PERFIL I ULK 500	1
2	0002183	TAPITA ALUMINIO LETRA G	1
3	0002313	REMACHE DIN7337 6,0X16 ALUMINIO	2
4	0001437	TORNILLO DIN912 M12X030	2
5	0000078	ARANDELA DIN125 M12 ZN	5
6	0000073	RODAMIENTO RADIAL 012X28X07	3
7	0000077	TUERCA DIN985 M12 ZN	3
8	0001256	RUEDA GUIA ULK 500	2
9	0000199	ARANDELA DENTADA DIN6798-A M12 ZN	2
10	0000163	TORNILLO DIN912 M12X020 8.8 ZN	2
11	0000585	PLETINA DE REFUERZO ULK XL	1
12	0001599	POLEA INFERIOR DE 60 ULK 500	1
13	0000072	ANILLO SEGURIDAD DIN472 I28	1
14	0001636	TORNILLO DIN7991 M12X040 10.9 ZN	1
15	0001409	GUARDACABLE INTERNO ULK 500	1
16	0000657	TOPE SUPERIOR ULK XL	1
17	0000320	TORNILLO DIN912 M08X020 8.8 ZN	2
18	0000448	TORNILLO DIN7991 M06X020 10.9 ZN	1
19	0000445	TUERCA DIN985 MO6 ZN	2
20	0001141	MUELLE TRACCION 56X8X82X0,5	1
21	0000716	TUERCA DIN1587 M08 ZN	1
22	0000140	ARANDELA DIN9021 M08 ZN	1
23	0001140	CASQUILLO GARRA SEGURO ULKXL	1
24	0001309	GARRA SEGURO ULK 500	1
25	0001308	PENDULO SEGURO ULK 500	1
26	0001143	TORNILLO DIN7991 M04X16 10.9 ZN	1
27	0001142	TUERCA DIN985 M04 ZN	1
28	0000826	TUERCA DIN1587 M06 ZN	1
29	0001145	TORNILLO DIN912 M06X030 8.8 ZN	1
30	0000224	TORNILLO DIN912 M08X025 8.8 ZN	1
31	0001679	TOPE SUPERIOR ULK 500	1
32	0000080	TUERCA DIN985 M08 ZN	2
33	0001317	TORNILLO DIN7991 M08X045 10.9 ZN	2
34	0001628	SOPORTE SALIDA CABLE ULK 500	1
35	0000660	TORNILLO DIN912 M10X035 8.8 ZN	1
36	0000143	ARANDELA DIN127 M10 ZN	1
37	0001325	POLEA DE COMPRA DE 45X10	1
38	0001326	SEPARADOR POLEA BASE ULK 500	1
39	0001407	PASADOR ELSATICO DIN1481 06X45	1
40	0001003	TORNILLO DIN7991 M10X040 10.9 ZN	1
41	0001680	ENGANCHE CABLE ULK 500	1
42	0002775	TUBO TERMORETRACTIL 9.5 MM ROJO	16 MM

Nr. 6: REF. 0002504 - COMPONENTES TRAMO II DERECHA / *2nd PROFILE COMPONENTS - RIGHT*

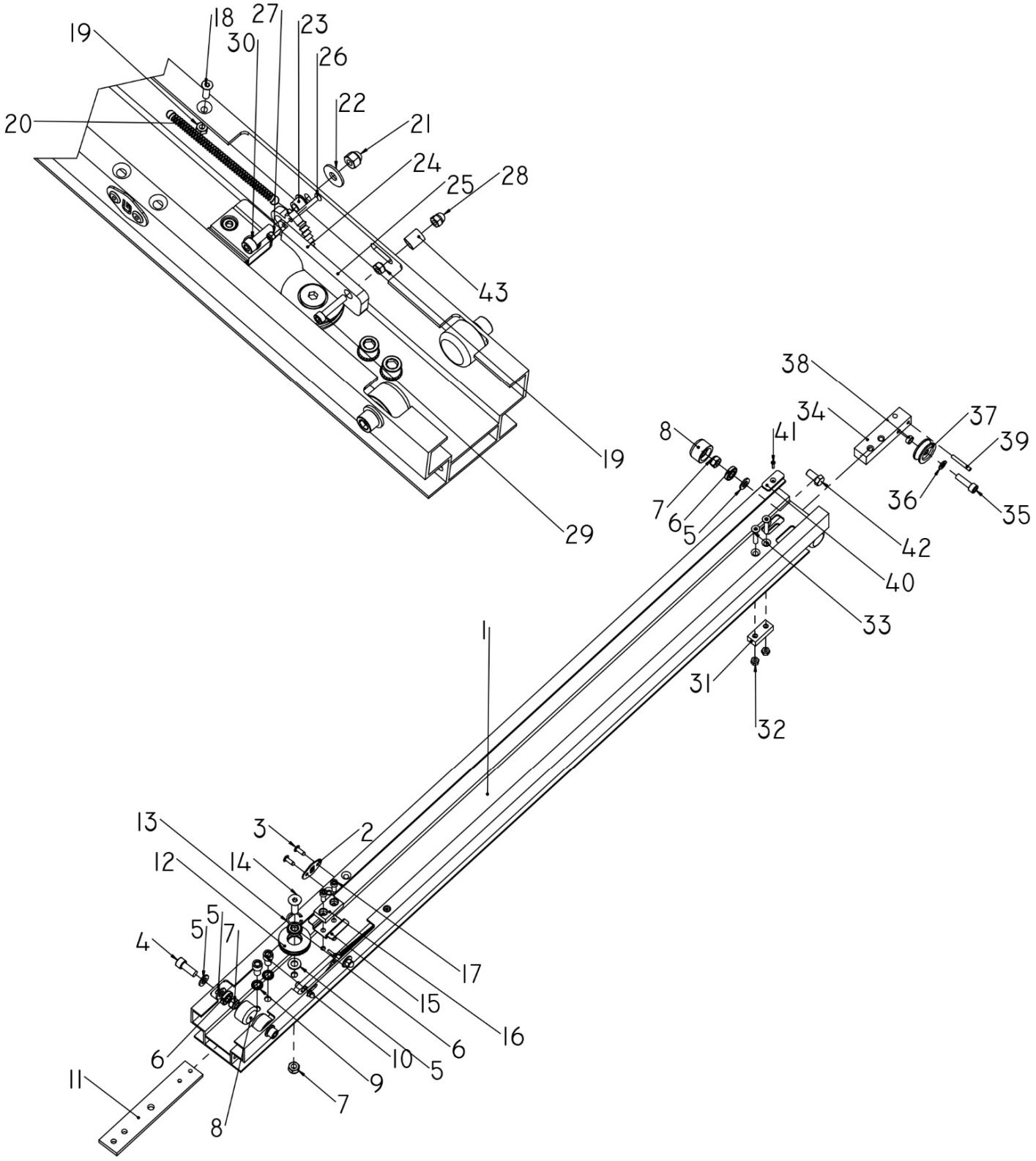

NUM	REF	DENOMINACIÓN / DESCRIPTION	CANT/QTY
1	0001488	PERFIL II ULK 500	1
2	0002183	TAPITA ALUMINIO LETRA G	1
3	0002313	REMACHE DIN7337 6,0X16 ALUMINIO	2
4	0001437	TORNILLO DIN912 M12X030	2
5	0000078	ARANDELA DIN125 M12 ZN	7
6	0000073	RODAMIENTO RADIAL 012X28X07	5
7	0000077	TUERCA DIN985 M12 ZN	5
8	0001256	RUEDA GUIA ULK 500	4
9	0000199	ARANDELA DENTADA DIN6798-A M12 ZN	2
10	0000163	TORNILLO DIN912 M12X020 8.8 ZN	2
11	0000585	PLETINA DE REFUERZO ULK XL	1
12	0001599	POLEA INFERIOR DE 60 ULK 500	1
13	0000072	ANILLO SEGURIDAD DIN472 I28	1
14	0001636	TORNILLO DIN7991 M12X040 10.9 ZN	1
15	0001409	GUARDACABLE INTERNO ULK 500	1
16	0000657	TOPE SUPERIOR ULK XL	1
17	0000320	TORNILLO DIN912 M08X020 8.8 ZN	2
18	0000448	TORNILLO DIN7991 M06X020 10.9 ZN	1
19	0000445	TUERCA DIN985 MO6 ZN	2
20	0001141	MUELLE TRACCION 56X8X82X0,5	1
21	0000716	TUERCA DIN1587 M08 ZN	1
22	0000140	ARANDELA DIN9021 M08 ZN	1
23	0001140	CASQUILLO GARRA SEGURO ULKXL	1
24	0001309	GARRA SEGURO ULK 500	1
25	0001308	PENDULO SEGURO ULK 500	1
26	0001143	TORNILLO DIN7991 M04X16 10.9 ZN	1
27	0001142	TUERCA DIN985 M04 ZN	1
28	0000826	TUERCA DIN1587 M06 ZN	1
29	0001145	TORNILLO DIN912 M06X030 8.8 ZN	1
30	0000224	TORNILLO DIN912 M08X025 8.8 ZN	1
31	0001679	TOPE SUPERIOR ULK 500	1
32	0000080	TUERCA DIN985 M08 ZN	2
33	0001317	TORNILLO DIN7991 M08X045 10.9 ZN	2
34	0001628	SOPORTE SALIDA CABLE ULK 500	1
35	0000660	TORNILLO DIN912 M10X035 8.8 ZN	1
36	0000143	ARANDELA DIN127 M10 ZN	1
37	0001325	POLEA DE COMPRA DE 45X10	1
38	0001326	SEPARADOR POLEA BASE ULK 500	1
39	0001407	PASADOR ELSATICO DIN1481 06X45	1
40	0001260	TAPITA ALUMINIO ULK 500	1
41	0002042	TORNILLO DIN7982 3.9X19 ZN	1
42	0000070	TORNILLO DIN933 M12X025 8.8 ZN	2
43	0002775	TUBO TERMORETRACTIL 9.5 MM ROJO	16 MM

Nr. 7:	REF. 0002508 - COMPONENTES TRAMO III IZQUIERDA / *3nd PROFILE COMPONENTS – LEFT* REF. 0002509 - COMPONENTES TRAMO III DERECHA / *3nd PROFILE COMPONENTS - RIGHT*

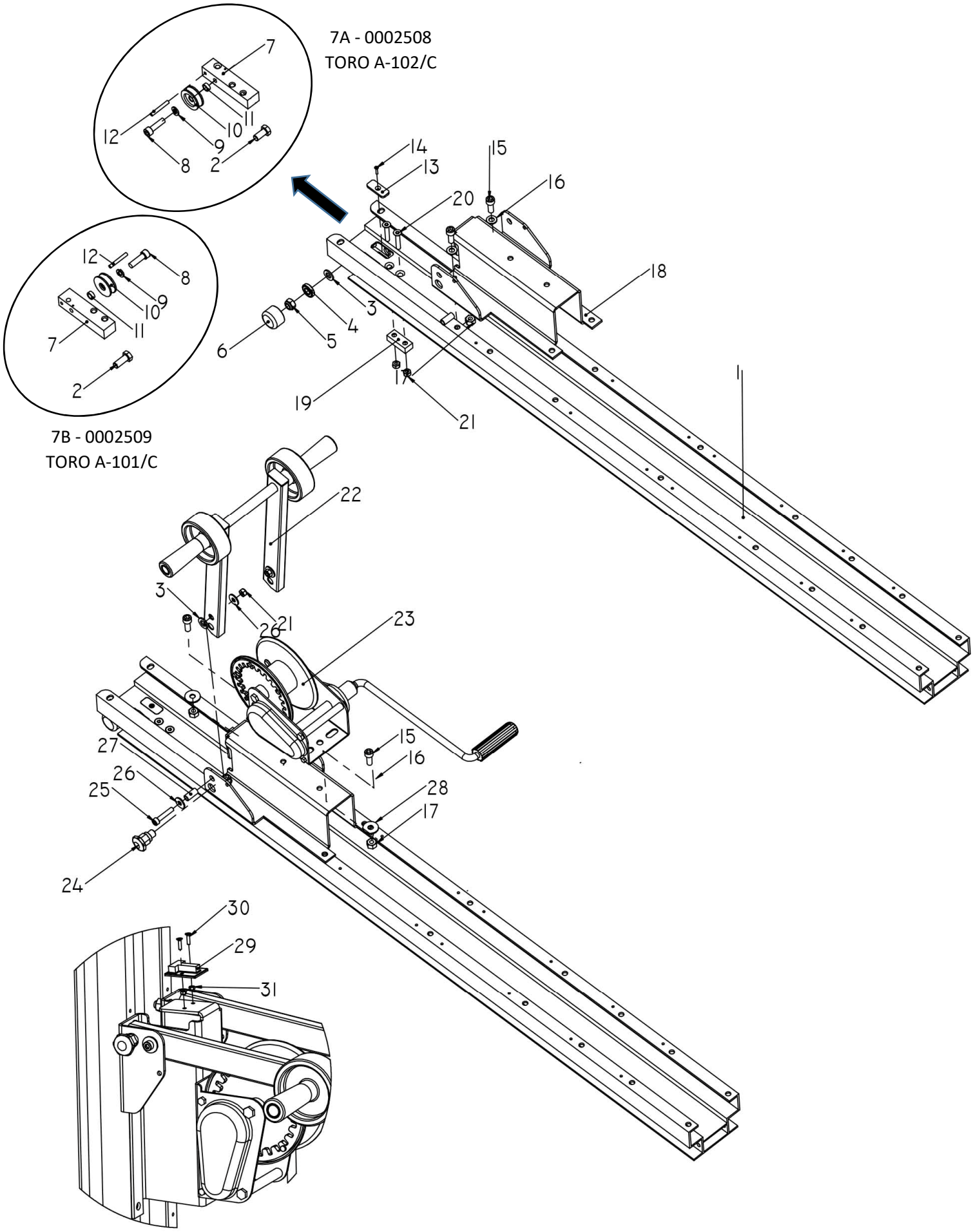

NUM	REF	DENOMINACIÓN / DESCRIPTION	CANT/QTY	PÁG/PAGE
1	0002400	PERFIL III ULK 500	1	-
2	0000070	TORNILLO DIN933 M12X025 8.8 ZN	2	-
3	0000078	ARANDELA DIN125 M12 ZN	4	-
4	0000073	RODAMIENTO RADIAL 012X28X07	2	-
5	0000077	TUERCA DIN985 M12 ZN	2	-
6	0001256	RUEDA GUIA ULK 500	2	-
7	0001628	SOPORTE SALIDA CABLE ULK 500	1	-
8	0000660	TORNILLO DIN912 M10X035 8.8 ZN	1	-
9	0000143	ARANDELA DIN127 M10 ZN	1	-
10	0001325	POLEA DE COMPRA DE 45X10	1	-
11	0001326	SEPARADOR POLEA-BASE ULK 500	1	-
12	0001407	PASADOR ELASTICO DIN1481 06X45	1	-
13	0001260	TAPITA ALUMINIO ULK 500	1	-
14	0002042	TORNILLO DIN7982 3.9X19 ZN	1	-
15	0000166	TORNILLO DIN912 M10X25 8.8 ZN	4	-
16	0000144	ARANDELA DIN125 M10 ZN	4	-
17	0000195	TUERCA DIN985 M10 ZN	4	-
18	0002901	AMARRE CABRESTANTE-TALADRO B	1	-
19	0001679	TOPE SUPERIOR ULK 500	1	-
20	0001317	TORNILLO DIN7991 M08X045 10.9 ZN	2	-
21	0000080	TUERCA DIN985 M08 ZN	4	-
22	0001702	RUEDAS MOVILES TORO B	1	17
23	AL-KO CF	CABRESTANTE AUTOFRENABLE	1	-
24	0001633	TIRADOR HEXAGONAL LARGO	1	-
25	0000171	TORNILLO DIN912 M08X040 8.8 ZN	2	-
26	0000140	ARANDELA DIN9021 M08 ZN	4	-
27	0001444	CASQUILLO BISAGRA ULK 500	2	-
28	0000194	ARANDELA DIN9021 M10 ZN	2	-
29	0002413	NIVELA ACRILICO NT29	1	-
30	0001143	TORNILLO DIN7991 M04X016 10.9 ZN	2	-
31	0001142	TUERCA DIN985 M04 ZN	2	-

Nr. 8: REF. 0003742 - BASE TORO A / *BASE TORO A*

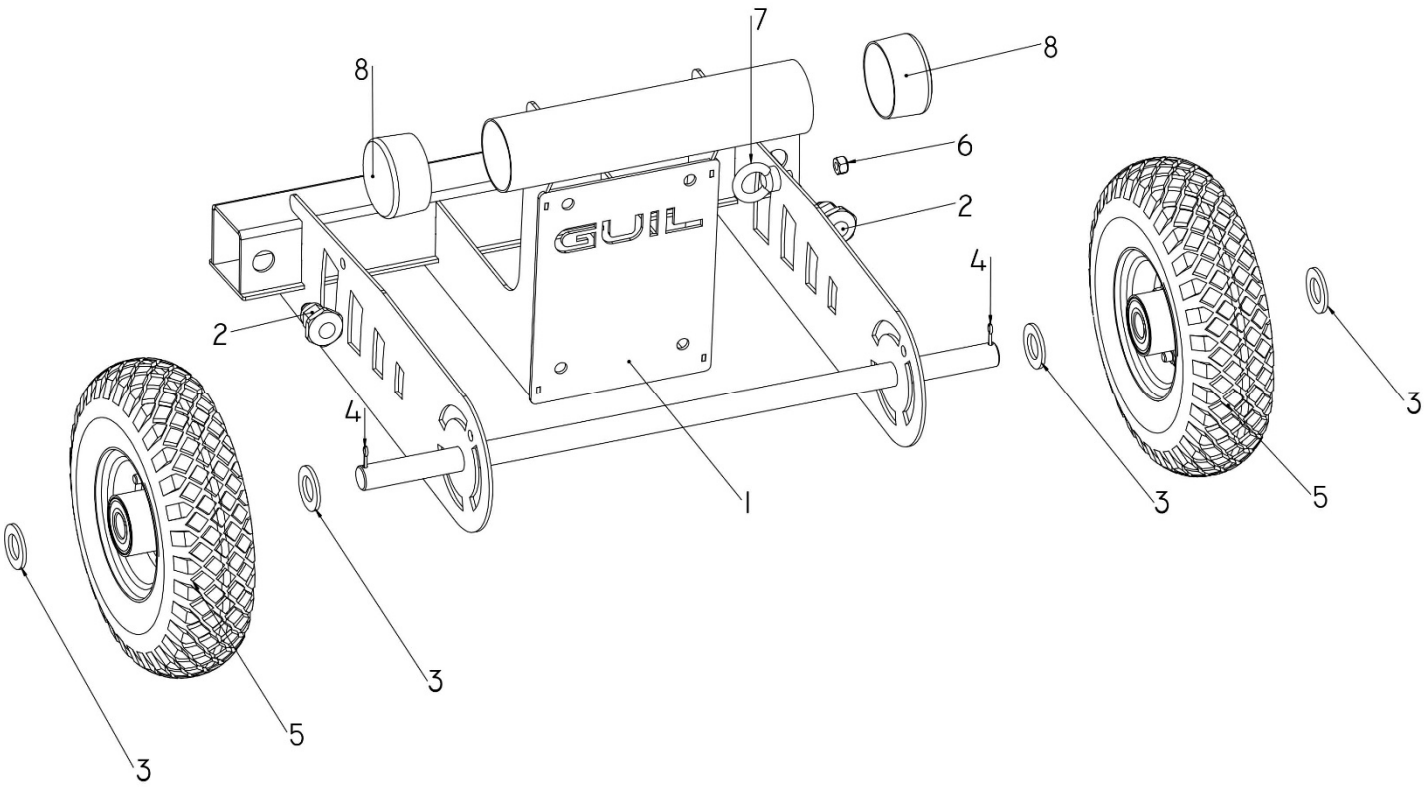

NUM	REF	DENOMINACIÓN / DESCRIPTION	CANT/QTY
1	0003645	SOLDADURA BASE TORO A	1
2	0001633	TIRADOR HEXAGONAL	2
3	0000130	ARANDELA DIN125 M20 ZN	4
4	0001670	PASADOR ALETAS DIN94 4X20	2
5	0003492	ARO 260 IMPINCHABLE	2
6	0000684	TUERCA DIN1587 M10 ZN	1
7	0002528	CANCAMO DIN580 M10	1
8	0003585	TAPON GOMA INFORMACION 60	2

Nr. 9: REF. 0001702 - RUEDAS ABATIBLES / *TRANSPORTATION WHEELS*

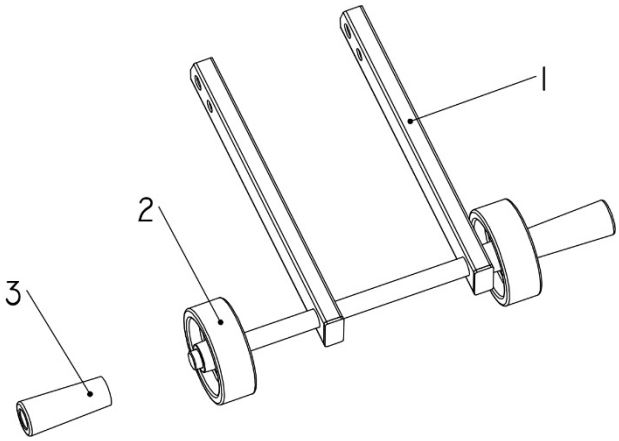

NUM	REF	DENOMINACIÓN / DESCRIPTION	CANT/QTY
1	0002120	SOPORTE RUEDAS MOVILES TORO B	1
2	0002898	ARO 100 TRANSPORTE	2
3	0002880	MANGO TRANSPORTE ULK 500	2

Nr. 10: REF. 0003267 - PATA IZQUIERDA / *LEFT STABILISER LEG*

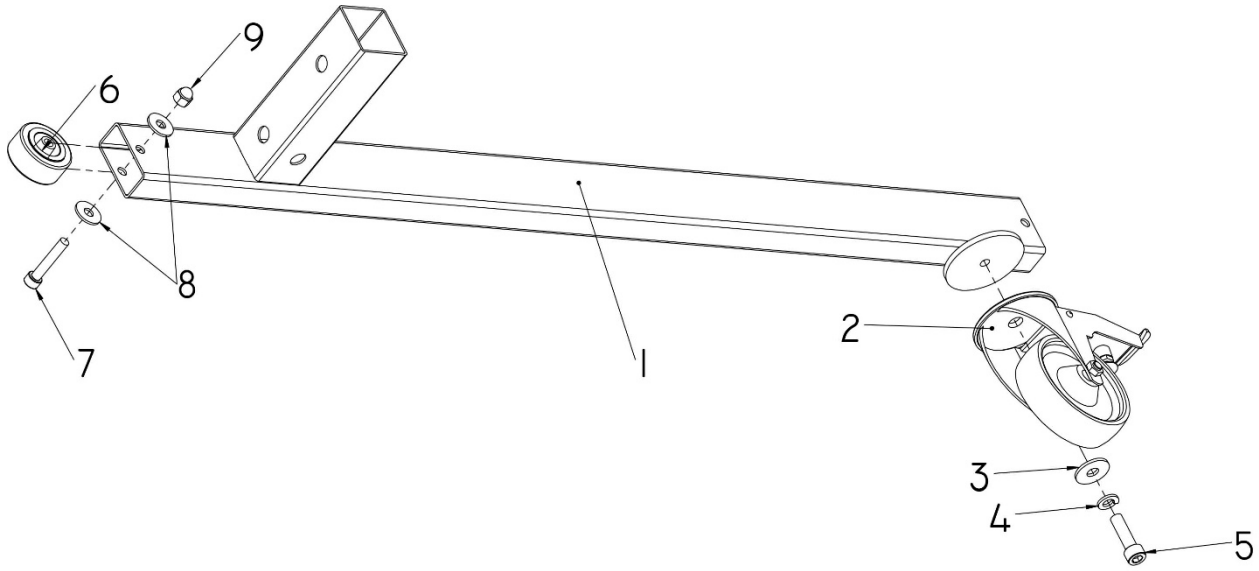

NUM	REF	DENOMINACIÓN / DESCRIPTION	CANT/QTY
1	0003188	SOLDADURA PATA IZQUIERDA 102	1
2	0003434	RUEDA 100 AP FRENO	1
3	0000194	ARANDELA DIN9021 M10 ZN	1
4	0000143	ARANDELA DIN127 M10 ZN	1
5	0000660	TORNILLO DIN912 M10X035 8.8 ZN	1
6	0003209	ARO 50 POLIPROPILENO	1
7	0000602	TORNILLO DIN912 M08X045 8.8 ZN	1
8	0000140	ARANDELA DIN9021 M08 ZN	2
9	0000716	TUERCA DIN1587 M08 ZN	1

Nr. 11: REF. 0003268 - PATA DERECHA / *RIGHT STABILISER LEG*

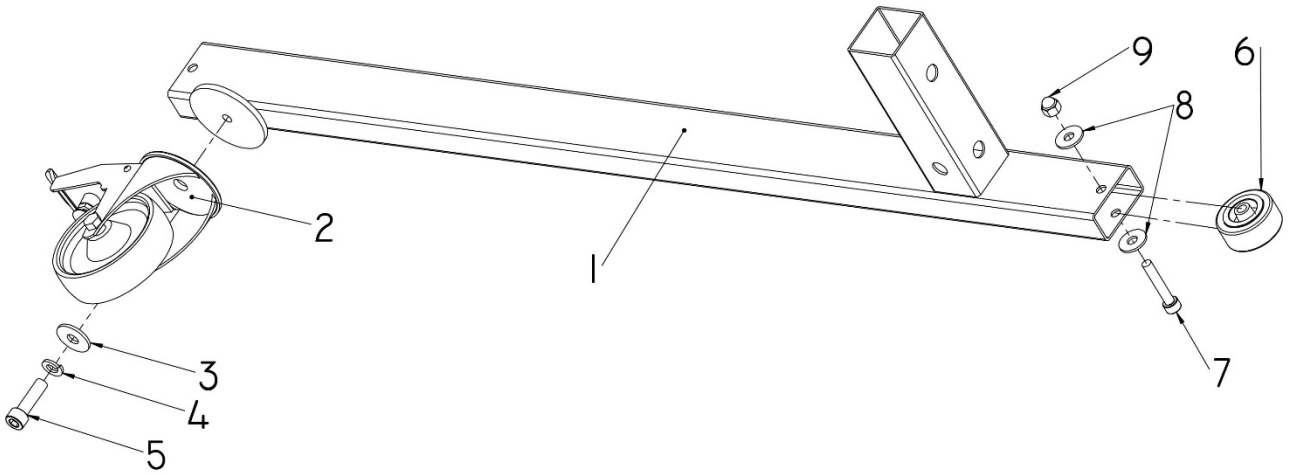

NUM	REF	DENOMINACIÓN / DESCRIPTION	CANT/QTY
1	0003189	SOLDADURA PATA DERECHA 102	1
2	0003434	RUEDA 100 AP FRENO	1
3	0000194	ARANDELA DIN9021 M10 ZN	1
4	0000143	ARANDELA DIN127 M10 ZN	1
5	0000660	TORNILLO DIN912 M10X035 8.8 ZN	1
6	0003209	ARO 50 POLIPROPILENO	1
7	0000602	TORNILLO DIN912 M08X045 8.8 ZN	1
8	0000140	ARANDELA DIN9021 M08 ZN	2
9	0000716	TUERCA DIN1587 M08 ZN	1

DECLARACIÓN DE CONFORMIDAD CE / *EC-CERTIFICATE OF CONFORMITY*

DECLARACIÓN CE DE CONFORMIDAD
EC-CERTIFICATE OF CONFORMITY

El Departamento de Investigación y Desarrollo de:
The Research and Development Department of:

GUIL Accesorios Música S.L.

Certifica que los modelos:
Certifies the models:

TORO A-102/C y **TORO A-101/C** – Elevadores de carga - están fabricados mediante procesos de mecanizado, soldadura (TIG / MIG) y montaje de piezas en acero y aluminio.

TORO A-102/C *and* ***TORO A-101/C*** *– Material lifters - are manufactured with steel and aluminium parts by drilling, welding (TIG / MIG) and assembly processes.*

Referencia / Reference	**TORO A-102/C**	**TORO A-101/C**
Carga Máx. / Max. Weight:	150 kg	170 kg
Altura Máx. / Max. Height:	4.10 m	2.90 m

Fabricados en:
Manufactured at the following location:

P.I. La Creu C/ Ismael Tomás Alacreu, 28
46250 L'Alcúdia –Valencia - SPAIN

Estos productos cumplen las exigencias de seguridad según las siguientes Normas y Reglamentos:
These products comply with the requirements of safety according to the following Standards and Regulations:

▪ Directive 2006/42/CE

Los elevadores de carga modelos **TORO A-102/C** y **TORO A-101/C** están sometidas a los controles de seguridad y pruebas de resistencia realizadas en la fábrica de producción.
TORO A-102/C *and* ***TORO A-101/C*** *material lifters are submitted by the manufacturer to a factory production control and to the further testing of samples taken at the factory.*

El presente certificado es válido salvo suspensión o retirada notificada con tiempo.
This Certificate is valid unless it is cancelled or withdraw upon written notification.

La persona facultada para elaborar el Expediente Técnico es: Salvador Gascó García, realizado en P.I. La Creu C/Ismael Tomás Alacreu, 28 – 46250 – L'Alcúdia, Valencia (SPAIN).
The qualified person to create this technical report is: Salvador Gascó García, carried out at the following address P.I. La Creu C/Ismael Tomás Alacreu, 28 – 46250 – L'Alcúdia, Valencia (SPAIN).

Ingeniero-Jefe
Chief Engineer

INGENIERO COLEGIADO VLC
SALVADOR GASCÓ
Exp.2-AA-542175
Reg.2003185760
46250-VALENCIA-SPAIN

Dipl.-Ing. S. Gascó

Fecha de emisión
Issued on
2019-10-29

LIBRO DE MANTENIMIENTO / *MAINTENANCE RECORD*

Referencia del elevador / *Lifter reference and serial number*:

Servicio realizado por / *Checked by*:
Fecha / *Date*:
Operación / *Tested elements*:

Servicio realizado por / *Checked by*:
Fecha / *Date*:
Operación / *Tested elements*:

Servicio realizado por / *Checked by*:
Fecha / *Date*:
Operación / *Tested elements*:

Servicio realizado por / *Checked by*:
Fecha / *Date*:
Operación / *Tested elements*:

Servicio realizado por / *Checked by*:
Fecha / *Date*:
Operación / *Tested elements*:

Servicio realizado por / *Checked by*:
Fecha / *Date*:
Operación / *Tested elements*:

Servicio realizado por / *Checked by*:
Fecha / *Date*:
Operación / *Tested elements*:

Servicio realizado por / *Checked by*:
Fecha / *Date*:
Operación / *Tested elements*:

Servicio realizado por / *Checked by*:
Fecha / *Date*:
Operación / *Tested elements*:

Servicio realizado por / *Checked by*:
Fecha / *Date*:
Operación / *Tested elements*:

Servicio realizado por / *Checked by*:
Fecha / *Date*:
Operación / *Tested elements*:

Servicio realizado por / *Checked by*:
Fecha / *Date*:
Operación / *Tested elements*:

Servicio realizado por / *Checked by*:
Fecha / *Date*:
Operación / *Tested elements*:

Servicio realizado por / *Checked by*:
Fecha / *Date*:
Operación / *Tested elements*:

Servicio realizado por / *Checked by*:
Fecha / *Date*:
Operación / *Tested elements*:

Servicio realizado por / *Checked by*:
Fecha / *Date*:
Operación / *Tested elements*:

Servicio realizado por / *Checked by*:
Fecha / *Date*:
Operación / *Tested elements*:

C.I.F. B96498829 VAT No ES- B96498829
P.I. La Creu C/ Ismael Tomás Alacreu, 28 46250 L'Alcúdia (VALENCIA) SPAIN
Tel: + 34. 96 299 65 00 Fax: + 34. 96 254 08 33

www.guil-lifters.com
info@guil.es

Fecha de edición de este manual / *Manual edition date*: 01/2022